RM520N-GL
Hardware Design

5G Module Series

Version: 1.0

Date: 2022-07-15

Status: Released

At Quectel, our aim is to provide timely and comprehensive services to our customers. If you require any assistance, please contact our headquarters:

Quectel Wireless Solutions Co., Ltd.
Building 5, Shanghai Business Park Phase III (Area B), No.1016 Tianlin Road, Minhang District, Shanghai 200233, China
Tel: +86 21 5108 6236
Email: info@quectel.com

Or our local offices. For more information, please visit:
http://www.quectel.com/support/sales.htm.

For technical support, or to report documentation errors, please visit:
http://www.quectel.com/support/technical.htm.
Or email us at: support@quectel.com.

Legal Notices

We offer information as a service to you. The provided information is based on your requirements and we make every effort to ensure its quality. You agree that you are responsible for using independent analysis and evaluation in designing intended products, and we provide reference designs for illustrative purposes only. Before using any hardware, software or service guided by this document, please read this notice carefully. Even though we employ commercially reasonable efforts to provide the best possible experience, you hereby acknowledge and agree that this document and related services hereunder are provided to you on an “as available” basis. We may revise or restate this document from time to time at our sole discretion without any prior notice to you.

Use and Disclosure Restrictions

License Agreements

Documents and information provided by us shall be kept confidential, unless specific permission is granted. They shall not be accessed or used for any purpose except as expressly provided herein.

Copyright

Our and third-party products hereunder may contain copyrighted material. Such copyrighted material shall not be copied, reproduced, distributed, merged, published, translated, or modified without prior written consent. We and the third party have exclusive rights over copyrighted material. No license shall be granted or conveyed under any patents, copyrights, trademarks, or service mark rights. To avoid ambiguities, purchasing in any form cannot be deemed as granting a license other than the normal non-exclusive, royalty-free license to use the material. We reserve the right to take legal action for noncompliance with abovementioned requirements, unauthorized use, or other illegal or malicious use of the material.

Trademarks

Except as otherwise set forth herein, nothing in this document shall be construed as conferring any rights to use any trademark, trade name or name, abbreviation, or counterfeit product thereof owned by Quectel or any third party in advertising, publicity, or other aspects.

Third-Party Rights

This document may refer to hardware, software and/or documentation owned by one or more third parties ("third-party materials"). Use of such third-party materials shall be governed by all restrictions and obligations applicable thereto.

We make no warranty or representation, either express or implied, regarding the third-party materials, including but not limited to any implied or statutory, warranties of merchantability or fitness for a particular purpose, quiet enjoyment, system integration, information accuracy, and non-infringement of any third-party intellectual property rights with regard to the licensed technology or use thereof. Nothing herein constitutes a representation or warranty by us to either develop, enhance, modify, distribute, market, sell, offer for sale, or otherwise maintain production of any our products or any other hardware, software, device, tool, information, or product. We moreover disclaim any and all warranties arising from the course of dealing or usage of trade.

Privacy Policy

To implement module functionality, certain device data are uploaded to Quectel's or third-party's servers, including carriers, chipset suppliers or customer-designated servers. Quectel, strictly abiding by the relevant laws and regulations, shall retain, use, disclose or otherwise process relevant data for the purpose of performing the service only or as permitted by applicable laws. Before data interaction with third parties, please be informed of their privacy and data security policy.

Disclaimer

a) We acknowledge no liability for any injury or damage arising from the reliance upon the information.
b) We shall bear no liability resulting from any inaccuracies or omissions, or from the use of the information contained herein.
c) While we have made every effort to ensure that the functions and features under development are free from errors, it is possible that they could contain errors, inaccuracies, and omissions. Unless otherwise provided by valid agreement, we make no warranties of any kind, either implied or express, and exclude all liability for any loss or damage suffered in connection with the use of features and functions under development, to the maximum extent permitted by law, regardless of whether such loss or damage may have been foreseeable.
d) We are not responsible for the accessibility, safety, accuracy, availability, legality, or completeness of information, advertising, commercial offers, products, services, and materials on third-party websites and third-party resources.

Copyright © Quectel Wireless Solutions Co., Ltd. 2022. All rights reserved.

Safety Information

The following safety precautions must be observed during all phases of operation, such as usage, service or repair of any cellular terminal or mobile incorporating the module. Manufacturers of the cellular terminal should notify users and operating personnel of the following safety information by incorporating these guidelines into all manuals of the product. Otherwise, Quectel assumes no liability for customers' failure to comply with these precautions.

	Full attention must be paid to driving at all times in order to reduce the risk of an accident. Using a mobile while driving (even with a handsfree kit) causes distraction and can lead to an accident. Please comply with laws and regulations restricting the use of wireless devices while driving.
	Switch off the cellular terminal or mobile before boarding an aircraft. The operation of wireless appliances in an aircraft is forbidden to prevent interference with communication systems. If there is an Airplane Mode, it should be enabled prior to boarding an aircraft. Please consult the airline staff for more restrictions on the use of wireless devices on an aircraft.
	Wireless devices may cause interference on sensitive medical equipment, so please be aware of the restrictions on the use of wireless devices when in hospitals, clinics or other healthcare facilities.
	Cellular terminals or mobiles operating over radio signal and cellular network cannot be guaranteed to connect in certain conditions, such as when the mobile bill is unpaid or the (U)SIM card is invalid. When emergency help is needed in such conditions, use emergency call if the device supports it. In order to make or receive a call, the cellular terminal or mobile must be switched on in a service area with adequate cellular signal strength. In an emergency, the device with emergency call function cannot be used as the only contact method considering network connection cannot be guaranteed under all circumstances.
	The cellular terminal or mobile contains a transceiver. When it is ON, it receives and transmits radio frequency signals. RF interference can occur if it is used close to TV sets, radios, computers or other electric equipment.
	In locations with explosive or potentially explosive atmospheres, obey all posted signs and turn off wireless devices such as mobile phone or other cellular terminals. Areas with explosive or potentially explosive atmospheres include fuelling areas, below decks on boats, fuel or chemical transfer or storage facilities, and areas where the air contains chemicals or particles such as grain, dust or metal powders.

About the Document

Revision History

Version	Date	Author	Description
-	2021-11-25	Wynna SHU/ Simon WANG	Creation of the document
1.0	2022-07-15	Juriyi XIE/ Wynna SHU/ Simon WANG	First official release

Contents

Safety Information **3**
About the Document **4**
Contents **5**
Table Index **8**
Figure Index **10**

1 Introduction **11**
1.1. Introduction 11
1.2. Reference Standard 11
1.3. Special Mark 12

2 Product Overview **13**
2.1. Frequency Bands and Functions 13
2.2. Key Features 14
2.3. EVB Kit 16
2.4. Functional Diagram 17
2.5. Pin Assignment 18
2.6. Pin Description 19

3 Operating Characteristics **24**
3.1. Operating Modes 24
3.1.1. Sleep Mode 25
3.1.2. Airplane Mode 26
3.2. Communication Interface with a Host 26
3.3. Power Supply 27
3.3.1. Voltage Stability Requirements 27
3.3.2. Reference Design for Power Supply 28
3.3.3. Power Supply Monitoring 29
3.4. Turn On 29
3.5. Turn Off 30
3.6. Reset 32

4 Application Interfaces **36**
4.1. (U)SIM Interfaces 36
4.1.1. Pin Definition of (U)SIM 36
4.1.2. (U)SIM Hot-Plug 37
4.1.3. Normally Closed (U)SIM Card Connector 38
4.1.4. Normally Open (U)SIM Card Connector 39
4.1.5. (U)SIM Card Connector Without Hot-Plug 39
4.1.6. (U)SIM2 Card Compatible Design 40
4.1.7. (U)SIM Design Notices 40
4.2. USB Interface 41
4.3. PCIe Interface 43

4.3.1. PCIe Operating Mode 43
4.3.2. Pin Definition of PCIe 44
4.3.3. Reference Design for PCIe 45
4.4. Control and Indication Interfaces 46
4.4.1. W_DISABLE1# 46
4.4.2. W_DISABLE2#* 47
4.4.3. LED_WWAN# 48
4.4.4. WAKE_ON_WAN# 49
4.4.5. DPR* 49
4.5. Cellular/WLAN COEX Interface* 50
4.6. Antenna Tuner Control Interface 50
4.7. Configuration Pins 51

5 RF Characteristics 53
5.1. Antenna Interfaces 53
5.1.1. Pin Definition 53
5.1.2. Cellular Network 54
5.1.2.1. Rx Sensitivity 54
5.1.2.2. Tx Power 57
5.1.3. GNSS 57
5.1.3.1. GNSS Frequency 57
5.1.3.2. GNSS Performance 58
5.2. Antenna Connectors 59
5.2.1. Antenna Connector Specifications 59
5.2.2. Antenna Connector Location 60
5.2.3. Antenna Connector Installation 61
5.2.4. Recommended RF Connector Installation 62
5.2.4.1. Assemble Coaxial Cable Plug Manually 62
5.2.4.2. Assemble Coaxial Cable Plug with Jig 63
5.2.5. Recommended Manufacturers of RF Connector and Cable 64
5.3. Antenna Requirements 64

6 Electrical Characteristics and Reliability 65
6.1. Power Supply Requirements 65
6.2. Power Consumption 65
6.3. Digital I/O Characteristic 67
6.4. ESD Protection 68
6.5. Thermal Dissipation 69
6.6. Absolute Maximum Ratings 70
6.7. Operating and Storage Temperatures 71
6.8. Notification 71
6.8.1. Coating 71
6.8.2. Cleaning 71

7 Mechanical Dimensions and Packaging 72
7.1. Mechanical Dimensions 72

7.2. Top and Bottom Views 73
7.3. M.2 Connector 73
7.4. Packaging 74
7.4.1. Blister Tray 74
7.4.2. Packaging Process 75

8 Appendix A References 76
9 Appendix B Operating Frequency 80

Table Index

Table 1: Special Mark 12
Table 2: Frequency Bands & MIMO & GNSS Systems 13
Table 3: Key Features of RM520N-GL 14
Table 4: Definition of I/O Parameters 19
Table 5: Pin Description 19
Table 6: Overview of Operating Modes 24
Table 7: Definition of VCC and GND Pins 27
Table 8: Definition of FULL_CARD_POWER_OFF# 29
Table 9: Turn-on Timing of the Module 30
Table 10: Turn-off Timing of the Module Through FULL_CARD_POWER_OFF# 31
Table 11: Definition of RESET# Pin 32
Table 12: Reset Timing of the Module's Warm Reset 34
Table 13: Reset Timing of the Module's Hard Reset 34
Table 14: Pin Definition of (U)SIM Interfaces 36
Table 15: Pin Definition of USB Interface 41
Table 16: USB Trace Length Inside the Module 42
Table 17: Pin Definition of PCIe Interface 44
Table 18: PCIe Trace Length Inside the Module 46
Table 19: Pin Definition of Control and Indication Interfaces 46
Table 20: RF Function Status 47
Table 21: GNSS Function Status 47
Table 22: Network Status Indications of LED_WWAN# 48
Table 23: State of the WAKE_ON_WAN# 49
Table 24: Function of the DPR Signal 49
Table 25: Pin Definition of COEX Interface 50
Table 26: Pin Definition of Antenna Tuner Control Interface 50
Table 27: Configuration Pins List of M.2 Specification 51
Table 28: Configuration Pins of the Module 51
Table 29: RM520N-GL Pin Definition of Antenna Interfaces 53
Table 30: RM520N-GL Conducted Receiving Sensitivity (Unit: dBm) 54
Table 31: Cellular Output Power 57
Table 32: GNSS Frequency 57
Table 33: GNSS Performance 58
Table 34: Major Specifications of the RF Connector 59
Table 35: Antenna Requirements 64
Table 36: Power Supply Requirements 65
Table 37: Averaged Current Consumption 65
Table 38: Logic Levels of 1.8 V Digital I/O 67
Table 39: Logic Levels of 3.3 V Digital I/O 67
Table 40: (U)SIM 1.8 V I/O Requirements 67
Table 41: (U)SIM 3.0 V I/O Requirements 68

Table 42: Electrostatic Discharge Characteristics (Temperature: 25 ºC, Humidity: 40 %) 68
Table 43: Absolute Maximum Ratings 70
Table 44: Operating and Storage Temperatures 71
Table 45: Related Documents..... 76
Table 46: Terms and Abbreviations 76
Table 47: Operating Frequencies (5G) 80
Table 48: Operating Frequencies (2G + 3G + 4G) 82

Figure Index

Figure 1: Functional Diagram 17
Figure 2: Pin Assignment 18
Figure 3: DRX Run Time and Current Consumption in Sleep Mode 25
Figure 4: Sleep Mode Application with USB Remote Wakeup 25
Figure 5: Power Supply Limits during Burst Transmission 27
Figure 6: Reference Circuit for VCC 28
Figure 7: Reference Circuit for Power Supply 28
Figure 8: Turn On the Module with a Host GPIO 29
Figure 9: Turn-on Timing of the Module 30
Figure 10: Turn-off Timing through FULL_CARD_POWER_OFF# 31
Figure 11: Reference Circuit for RESET# with NPN Driver Circuit 32
Figure 12: Reference Circuit for RESET# with a Button 33
Figure 13: Reset Timing of the Module's Warm Reset 33
Figure 14: Reset Timing of the Module's Hard Reset 34
Figure 15: Reference Circuit for Normally Closed (U)SIM Card Connector 38
Figure 16: Reference Circuit for Normally Open (U)SIM Card Connector 39
Figure 17: Reference Circuit for a 6-Pin (U)SIM Card Connector 39
Figure 18: Recommended Compatible Design for (U)SIM2 Interface 40
Figure 19: Reference Circuit of USB 3.1 & 2.0 Interfaces 41
Figure 20: PCIe Interface Reference Circuit 45
Figure 21: W_DISABLE1# and W_DISABLE2# Reference Circuit 48
Figure 22: LED_WWAN# Reference Circuit 48
Figure 23: WAKE_ON_WAN# Signal Reference Circuit 49
Figure 24: Recommended Circuit for Configuration Pins 52
Figure 25: Dimensions of the Receptacle (Unit: mm) 59
Figure 26: RM520N-GL Antenna Connectors 60
Figure 27: Dimensions of Mated Plugs (Ø0.81/Ø1.13 mm Coaxial Cables) (Unit: mm) 61
Figure 28: Space Factor of Mated Connectors (Ø 0.81 mm Coaxial Cables) (Unit: mm) 61
Figure 29: Space Factor of Mated Connectors (Ø 1.13 mm Coaxial Cables) (Unit: mm) 62
Figure 30: Plug in a Coaxial Cable Plug 62
Figure 31: Pull out a Coaxial Cable Plug 63
Figure 32: Install the Coaxial Cable Plug with Jig 63
Figure 33: Thermal Dissipation Area Inside and on Bottom Side of the Module 69
Figure 34: Placement and Fixing of the Heatsink 70
Figure 35: Mechanical Dimensions of the Module (Unit: mm) 72
Figure 36: RM520N-GL Top and Bottom Views 73
Figure 37: Blister Tray Dimension Drawing 74
Figure 38: Packaging Process 75

1 Introduction

1.1. Introduction

The document introduces RM520N-GL module and describes its air and hardware interfaces connected to your applications.

This document helps you quickly understand the interface specifications, RF characteristics, electrical and mechanical details, as well as other related information. To facilitate its application in different fields, reference design is also provided. Associated with application notes and user guides, you can use the module to design and set up mobile applications easily. You can also see ***document [1]*** to understand the module hardware architecture.

1.2. Reference Standard

The module complies with the following standards:

- *PCI Express M.2 Specification Revision 4.0, Version 1.0*
- *PCI Express Base Specification Revision 4.0*
- *Universal Serial Bus 3.1 Specification*
- *ISO/IEC 7816-3*
- *MIPI Alliance Specification for RF Front-End Control Interface version 2.0*
- *3GPP TS 27.007* and *3GPP TS 27.005*

1.3. Special Mark

Table 1: Special Mark

Mark	Definition
*	Unless otherwise specified, when an asterisk (*) is used after a function, feature, interface, pin name, AT command, or argument, it indicates that the function, feature, interface, pin, AT command, or argument is under development and currently not supported; and the asterisk (*) after a model indicates that the sample of the model is currently unavailable.

2 Product Overview

2.1. Frequency Bands and Functions

RM520N-GL is a 5G NR/LTE-FDD/LTE-TDD/UMTS/HSPA+ wireless communication module with receive diversity. It provides data connectivity on 5G NR SA and NSA, LTE-FDD, LTE-TDD, DC-HSDPA, HSPA+, HSDPA, HSUPA and WCDMA networks. RM520N-GL is a standard M.2 Key-B WWAN module. For more details, see *PCI Express M.2 Specification Revision 4.0, Version 1.0*

RM520N-GL supports embedded operating systems such as Windows, Linux and Android, and also provides GNSS and voice* functions to meet specific application demands.

RM520N-GL is an industrial-grade module for industrial and commercial applications only.

The following table shows the frequency bands, MIMO and GNSS systems supported by the module.

Table 2: Frequency Bands & MIMO & GNSS Systems

Mode	Frequency Bands
5G NR SA	n1/n2/n3/n5/n7/n8/n12/n13/n14/n18/n20/n25/n26/n28/n29/n30/n38/n40/n41/n48/n66/n70/n71/n75/n76/n77/n78/n79 **DL 4 × 4 MIMO:** n1/n2/n3/n7/n25/n30/n38/n40/n41/n48/n66/n70/n77/n78/n79 **UL 2 × 2 MIMO**: n38/n41/n48/n77/n78/n79
5G NR NSA	n1/n2/n3/n5/n7/n8/n12/n13/n14/n18/n20/n25/n26/n28/n29/n30/n38/n40/n41/n48/n66/n70/n71/n75/n76/n77/n78/n79 **DL 4 × 4 MIMO**: n1/n2/n3/n7/n25/n30/n66/n38/n40/n41/n48/n70/n77/n78/n79
LTE	**FDD:** B1/B2/B3/B4/B5/B7/B8/B12/B13/B14/B17/B18/B19/B20/B25/B26/B28/B29/B30/B32/B66/B71 **TDD:** B34/B38/B39/B40/B41/B42/B43/B46(LAA)/B48 **DL 4 × 4 MIMO**: B1/B2/B3/B4/B7/B25/B30/B38/B40/B41/B42/B43/B48/B66
WCDMA	B1/B2/B4/B5/B8/B19
GNSS	GPS/GLONASS/BDS/Galileo/QZSS

The module can be applied to the following fields:

- Rugged tablet PC and laptop computer
- Remote monitor system
- Smart metering system
- Wireless CPE
- Smart TV
- Outdoor live streaming equipment
- Wireless router and switch
- Other wireless terminal devices

2.2. Key Features

Table 3: Key Features of RM520N-GL

Feature	Details
Function Interface	PCI Express M.2 Interface
Power Supply	● Supply voltage: 3.135–4.4 V ● Typical supply voltage: 3.7 V
(U)SIM Interface	● Compliant with *ISO/IEC 7816-3*, ETSI and IMT-2000 ● Supported (U)SIM card: Class B (3.0 V) and Class C (1.8 V) ● (U)SIM1 and (U)SIM2 interfaces ● Dual SIM Single Standby
eSIM	Optional eSIM function
USB Interface	● Compliant with USB 3.1 Gen2 and USB 2.0 specifications ● Maximum transmission rates: – USB 3.1 Gen2: 10 Gbps – USB 2.0: 480 Mbps ● Used for AT command communication, data transmission, firmware upgrade (USB 2.0 only), software debugging, GNSS NMEA sentence output and voice over USB* ● Supported USB serial drivers: – Windows 7/8/8.1/10, – Linux 2.6–5.18 – Android 4.x–12.x
PCIe Interface	● Complaint with PCIe Gen4 ● PCIe × 1 lane, supporting up to 16 Gbps ● Used for AT command communication, data transmission, firmware upgrade, software debugging, GNSS NMEA sentence output

Transmitting Power	● 5G NR bands: Class 3 (23 dBm ±2 dB) ● 5G NR HPUE bands (n38/n40/n41/n77/n78/n79): Class 2 (26 dBm +2/-3 dB) ● LTE bands: Class 3 (23 dBm ±2 dB) ● LTE HPUE [1] bands (B38/B41/B42/B43): Class 2 (26 dBm ±2 dB) ● WCDMA bands: Class 3 (24 dBm +1/-3 dB)
5G NR Features	● 3GPP Release 16 ● Supported modulations: – Uplink: π/2-BPSK, QPSK, 16QAM, 64QAM and 256QAM – Downlink: QPSK, 16QAM, 64QAM and 256QAM ● Supported SCS: 15 kHz [2] and 30 kHz [2] ● SA [3] and NSA [3] operation modes supported on all the 5G band ● Option 3x, 3a, 3 and Option 2 ● Maximum transmission data rates [4]: – NSA: 3.4 Gbps (DL)/ 550 Mbps (UL) – SA: 2.4 Gbps (DL)/ 900 Mbps (UL)
LTE Features	● 3GPP Release 16 ● LTE Category: DL Cat 19/ UL Cat 18 ● Supported modulations: – Uplink: QPSK, 16QAM and 64QAM and 256QAM – Downlink: QPSK, 16QAM and 64QAM and 256QAM ● Supports 1.4/3/5/10/15/20 MHz RF bandwidth ● Maximum transmission data rates [4]: 1.6 Gbps (DL)/ 200 Mbps (UL)
UMTS Features	● 3GPP Release 9, DC-HSDPA, HSPA+, HSDPA, HSUPA and WCDMA ● Supported modulations: QPSK, 16QAM and 64QAM ● Maximum transmission data rates [4]: – DC-HSDPA: 42 Mbps (DL) – HSUPA: 5.76 Mbps (UL) – WCDMA: 384 kbps (DL)/ 384 kbps (UL)
Rx-diversity	● 5G NR/LTE/WCDMA Rx-diversity
GNSS Features	● Protocol: NMEA 0183 ● Data Update Rate: 1 Hz
Antenna Interfaces	● ANT0, ANT1, ANT2, and ANT3
AT Commands	● Compliant with *3GPP TS 27.007* and *3GPP TS 27.005* ● Quectel enhanced AT commands
Internet Protocol Features	● NITZ, PING and QMI protocols ● PAP and CHAP for PPP connections
Firmware Upgrade	● USB 2.0 interface ● PCIe interface

[1] HPUE is only for single carrier.
[2] 5G NR FDD bands only support 15 kHz SCS, and NR TDD bands only support 30 kHz SCS.
[3] See ***document [2]*** for bandwidth supported by each frequency band in the NSA and SA modes.
[4] The maximum rates are theoretical and the actual values depend on the network configuration.

	● (D)FOTA (A/B system updates supported)
SMS	● Text and PDU modes ● Point-to-point MO and MT ● SMS cell broadcast ● SMS storage: ME by default
Physical Characteristics	● M.2 Key-B ● Size: 30.0 mm × 52.0 mm × 2.3 mm ● Weight: approx. 8.7 g
Temperature Range	● Operating temperature range: -30 °C to +75 °C [5] ● Extended temperature range: -40 °C to +85 °C [6] ● Storage temperature range: -40 °C to +90°C
RoHS	All hardware components are fully compliant with EU RoHS directive

2.3. EVB Kit

To help you develop applications with the module, Quectel supplies an evaluation board (5G-M2 EVB) with accessories to control or test the module. For more details, see ***document [3]***.

[5] To meet this operating temperature range, you need to ensure effective thermal dissipation, for example, by adding passive or active heatsinks, heat pipes, vapor chambers, etc. Within this range, the module can meet 3GPP specifications.
[6] To meet this extended temperature range, you need to ensure effective thermal dissipation, for example, by adding passive or active heatsinks, heat pipes, vapor chambers, etc. Within this range, the module remains the ability to establish and maintain functions such as voice*, SMS, emergency call*, etc., without any unrecoverable malfunction. Radio spectrum and radio network are not influenced, while one or more specifications, such as P_{out}, may undergo a reduction in value, exceeding the specified tolerances of 3GPP. When the temperature returns to the normal operating temperature level, the module will meet 3GPP specifications again.

2.4. Functional Diagram

The following figure is a block diagram of RM520N-GL.

- Power management
- Baseband
- LPDDR4X SDRAM + NAND Flash
- Radio frequency
- M.2 Key-B interface

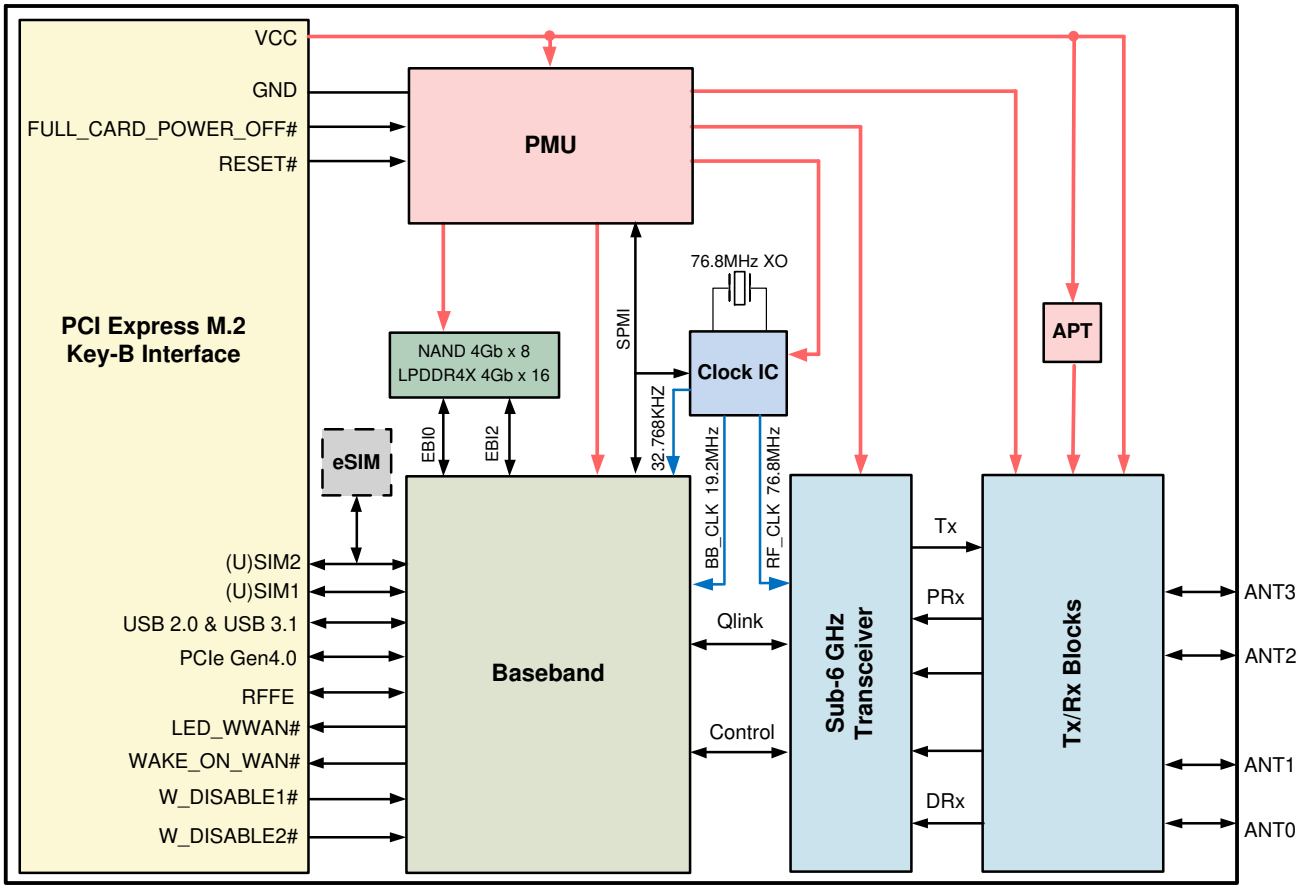

Figure 1: Functional Diagram

2.5. Pin Assignment

The following figure shows the pin assignment of the module.

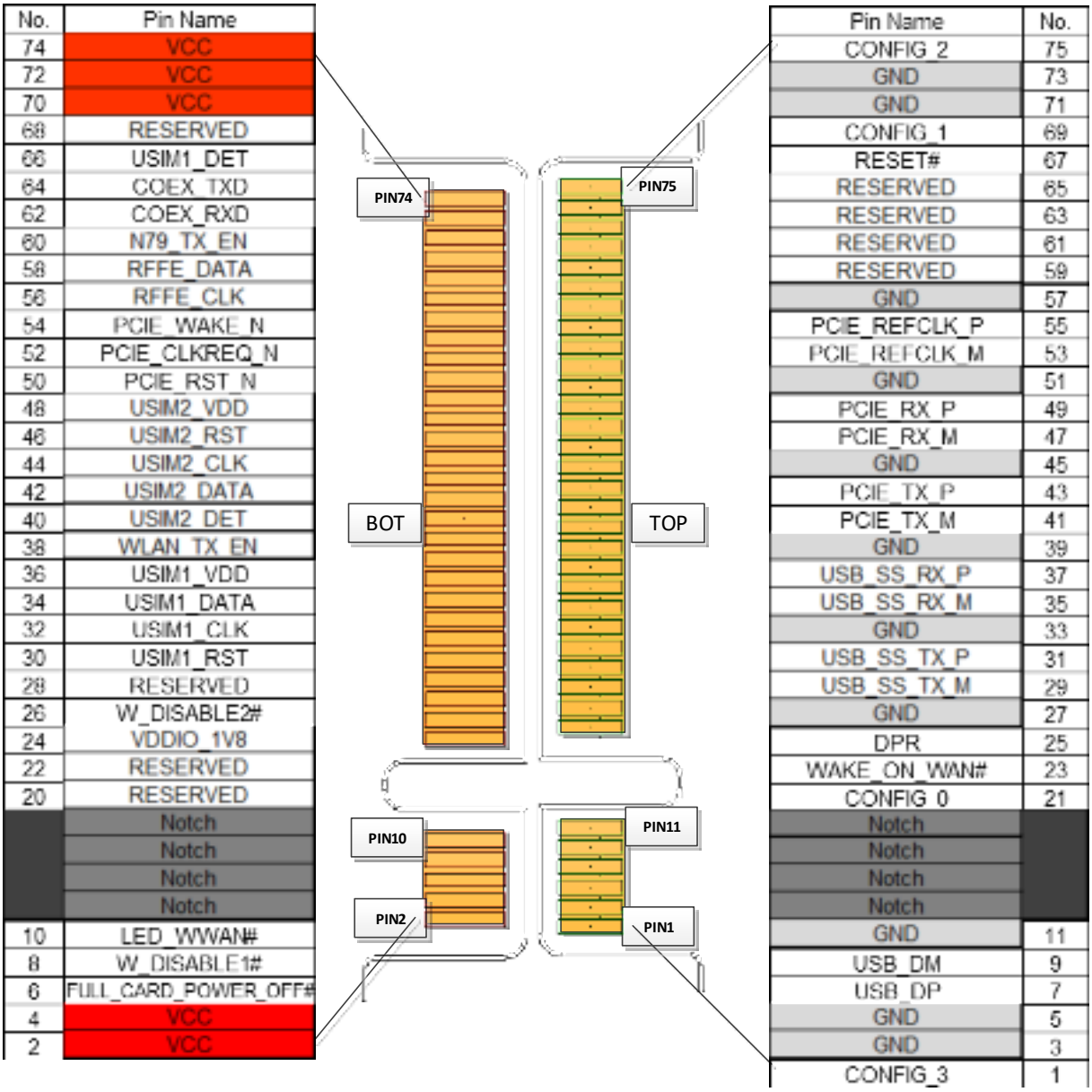

No.	Pin Name
74	VCC
72	VCC
70	VCC
68	RESERVED
66	USIM1_DET
64	COEX_TXD
62	COEX_RXD
60	N79_TX_EN
58	RFFE_DATA
56	RFFE_CLK
54	PCIE_WAKE_N
52	PCIE_CLKREQ_N
50	PCIE_RST_N
48	USIM2_VDD
46	USIM2_RST
44	USIM2_CLK
42	USIM2_DATA
40	USIM2_DET
38	WLAN_TX_EN
36	USIM1_VDD
34	USIM1_DATA
32	USIM1_CLK
30	USIM1_RST
28	RESERVED
26	W_DISABLE2#
24	VDDIO_1V8
22	RESERVED
20	RESERVED
	Notch
	Notch
	Notch
	Notch
10	LED_WWAN#
8	W_DISABLE1#
6	FULL_CARD_POWER_OFF#
4	VCC
2	VCC

Pin Name	No.
CONFIG_2	75
GND	73
GND	71
CONFIG_1	69
RESET#	67
RESERVED	65
RESERVED	63
RESERVED	61
RESERVED	59
GND	57
PCIE_REFCLK_P	55
PCIE_REFCLK_M	53
GND	51
PCIE_RX_P	49
PCIE_RX_M	47
GND	45
PCIE_TX_P	43
PCIE_TX_M	41
GND	39
USB_SS_RX_P	37
USB_SS_RX_M	35
GND	33
USB_SS_TX_P	31
USB_SS_TX_M	29
GND	27
DPR	25
WAKE_ON_WAN#	23
CONFIG_0	21
Notch	
Notch	
Notch	
Notch	
GND	11
USB_DM	9
USB_DP	7
GND	5
GND	3
CONFIG_3	1

Figure 2: Pin Assignment

2.6. Pin Description

Table 4: Definition of I/O Parameters

Type	Description
AI	Analog Input
AO	Analog Output
AIO	Analog Input/Output
DI	Digital Input
DO	Digital Output
DIO	Digital Input/Output
OD	Open Drain
PI	Power Input
PO	Power Output
PU	Pull Up
PD	Pull Down

The following table shows the pin definition and description of the module.

Table 5: Pin Description

Pin No.	Pin Name	I/O	Description	DC Characteristic	Comment
1	CONFIG_3	DO	Not connected internally		
2	VCC	PI	Power supply for the module	Vmin = 3.135 V Vnom = 3.7 V Vmax = 4.4 V	
3	GND		Ground		
4	VCC	PI	Power supply for the module	Vmin = 3.135 V Vnom = 3.7 V Vmax = 4.4 V	
5	GND		Ground		

6	FULL_CARD_ POWER_OFF#	DI, PD	Turn on/off the module High level: Turn on Low level: Turn off	V_{IH}max = 4.4 V V_{IH}min = 1.19 V V_{IL}max = 0.2 V	Internally pulled down with a 100 kΩ resistor.
7	USB_DP	AIO	USB differential data (+)		
8	W_DISABLE1#	DI, PU	Airplane mode control Active LOW	1.8/3.3 V	Internally pulled up to 1.8 V with a 100 kΩ resistor.
9	USB_DM	AIO	USB differential data (-)		
10	LED_WWAN#	OD	RF status LED indicator Active LOW	VCC	
11	GND		Ground		
12	Notch		Notch		
13	Notch		Notch		
14	Notch		Notch		
15	Notch		Notch		
16	Notch		Notch		
17	Notch		Notch		
18	Notch		Notch		
19	Notch		Notch		
20	RESERVED				
21	CONFIG_0	DO	Not connected internally		
22	RESERVED				
23	WAKE_ON_WAN#	OD	Wake up the host Active LOW	1.8/3.3 V	
24	VDDIO_1V8	PO	Provide 1.8 V for external circuit	1.8 V	Maximum output current: 50 mA
25	DPR*	DI, PU	Dynamic power reduction	1.8 V	
26	W_DISABLE2#*	DI, PU	GNSS control Active LOW	1.8/3.3 V	Internally pulled up to 1.8 V with a 100 kΩ resistor.
27	GND		Ground		

28	RESERVED			
29	USB_SS_TX_M	AO	USB 3.1 super-speed transmit (-)	
30	USIM1_RST	DO, PD	(U)SIM1 card reset	USIM1_VDD 1.8/3.0 V
31	USB_SS_TX_P	AO	USB 3.1 super-speed transmit (+)	
32	USIM1_CLK	DO, PD	(U)SIM1 card clock	USIM1_VDD 1.8/3.0 V
33	GND		Ground	
34	USIM1_DATA	DIO, PU	(U)SIM1 card data	USIM1_VDD 1.8/3.0 V
35	USB_SS_RX_M	AI	USB 3.1 super-speed receive (-)	
36	USIM1_VDD	PO	(U)SIM1 card power supply	USIM1_VDD 1.8/3.0 V
37	USB_SS_RX_P	AI	USB 3.1 super-speed receive (+)	
38	WLAN_TX_EN*	DI	Notification from WLAN to SDR when WLAN transmitting	1.8 V
39	GND		Ground	
40	USIM2_DET [7]	DI, PD	(U)SIM2 card hot-plug detect	1.8 V
41	PCIE_TX_M	AO	PCIe transmit (-)	
42	USIM2_DATA	DIO, PU	(U)SIM2 card data	USIM2_VDD 1.8/3.0 V
43	PCIE_TX_P	AO	PCIe transmit (+)	
44	USIM2_CLK	DO, PD	(U)SIM2 clock	USIM2_VDD 1.8/3.0 V
45	GND		Ground	
46	USIM2_RST	DO, PD	(U)SIM2 card reset	USIM2_VDD 1.8/3.0 V
47	PCIE_RX_M	AI	PCIe receive (-)	

[7] USIM1_DET and USIM2_DET are pulled LOW by default, and will be internally pulled up to 1.8 V by software configuration only when (U)SIM hot-plug is enabled by **AT+QSIMDET**.

48	USIM2_VDD	PO	(U)SIM2 card power supply	USIM2_VDD 1.8/3.0V	
49	PCIE_RX_P	AI	PCIe receive (+)		
50	PCIE_RST_N	DI [8]	PCIe reset Active LOW	1.8/3.3 V	
51	GND		Ground		
52	PCIE_CLKREQ_N	OD [8]	PCIe clock request Active LOW	1.8/3.3 V	
53	PCIE_REFCLK_M	AIO	PCIe reference clock (-)		
54	PCIE_WAKE_N	OD [8]	PCIe wake up Active LOW	1.8/3.3 V	
55	PCIE_REFCLK_P	AIO	PCIe reference clock (+)		
56	RFFE_CLK* [9]	DO, PD	Used for external MIPI IC control	1.8 V	
57	GND		Ground		
58	RFFE_DATA* [9]	DIO, PD	Used for external MIPI IC control	1.8 V	
59	RESERVED				
60	N79_TX_EN*	DO	Notification from SDR to WLAN when n79 transmitting	1.8 V	
61	RESERVED				
62	COEX_RXD* [10]	DI, PD	5G/LTE and WLAN coexistence receive	1.8 V	
63	RESERVED				
64	COEX_TXD* [10]	DO, PD	5G/LTE and WLAN coexistence transmit	1.8 V	
65	RESERVED				
66	USIM1_DET [7]	DI, PD	(U)SIM1 card hot-plug detect	1.8 V	
67	RESET#	DI, PU	Reset the module Active LOW	1.8 V	Internally pulled up to 1.8 V

[8] PCIE_RST_N behaves as DI in PCIe EP mode, and as OD in PCIe RC mode. PCIE_CLKREQ_N and PCIE_WAKE_N behave as OD in PCIe EP mode, and as DI in PCIe RC mode. PCIe EP mode is the default.
[9] If this function is required, please contact Quectel for more details.
[10] Please note that COEX_RXD and COEX_TXD cannot be used as general UART ports.

68	RESERVED			
69	CONFIG_1	DO	Connected to GND internally	
70	VCC	PI	Power supply for the module	Vmin = 3.135 V Vnom = 3.7 V Vmax = 4.4 V
71	GND		Ground	
72	VCC	PI	Power supply for the module	Vmin = 3.135 V Vnom = 3.7 V Vmax = 4.4 V
73	GND		Ground	
74	VCC	PI	Power supply for the module	Vmin = 3.135 V Vnom = 3.7 V Vmax = 4.4 V
75	CONFIG_2	DO	Not connected internally	

NOTE

1. Keep all RESERVED and unused pins unconnected.
2. When the module is connected with an IPQ device to achieve Wi-Fi function, pin 68, pin 64, and pin 62 can be used for status signal between the IPQ device and the module.
   - Pin 68 (AP2SDX_STATUS): Status indication signal from the IPQ device to the module
   - Pin 64 (SDX2AP_STATUS): Status indication signal from the module to the IPQ device
   - Pin 62 (SDX2AP_E911_STATUS): E911 status indication signal from the module to IPQ device.

3 Operating Characteristics

3.1. Operating Modes

The table below briefly summarizes the various operating modes of the module.

Table 6: Overview of Operating Modes

Mode	Details	
Full Functionality Mode	Idle	Software is active. The module has registered on the network, and it is ready to send and receive data.
	Voice*/Data	Network is connected. In this mode, the power consumption is determined by network setting and data transfer rate.
Minimum Functionality Mode	**AT+CFUN=0** command sets the module to a minimum functionality mode without removing the power supply. In this mode, both RF function and (U)SIM card are invalid.	
Airplane Mode	**AT+CFUN=4** command or driving W_DISABLE1# pin LOW will set the module to airplane mode. In this mode, the RF function is invalid.	
Sleep Mode	When **AT+QSCLK=1** command is executed and the host's USB enters suspend mode, the module will enter sleep mode. The module keeps receiving paging messages, SMS, voice calls* and TCP/UDP data from the network with its current consumption reducing to the minimal level.	
Power Down Mode	In this mode, the power management unit shuts down the power supply. Software is inactive, all application interfaces are inaccessible, and the operating voltage (connected to VCC) remains applied.	

NOTE

For more details about the AT command, see ***document [4]***.

3.1.1. Sleep Mode

DRX of the module is able to reduce the current consumption to a minimum value during the sleep mode, and DRX cycle values are broadcasted by the wireless network. The figure below shows the relationship between the DRX run time and the current consumption in sleep mode. The longer the DRX cycle is, the lower the current consumption will be.

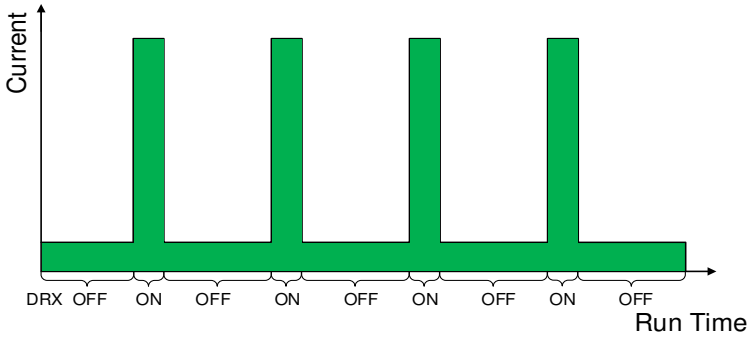

Figure 3: DRX Run Time and Current Consumption in Sleep Mode

The following part of this section presents the power saving procedure and sleep mode of the module.

If the host supports USB suspend/resume and remote wakeup function, the following two conditions must be met to set the module to sleep mode.

- **AT+QSCLK=1** command is executed.
- The module's USB interface enters suspend mode.

The following figure shows the connection between the module and the host.

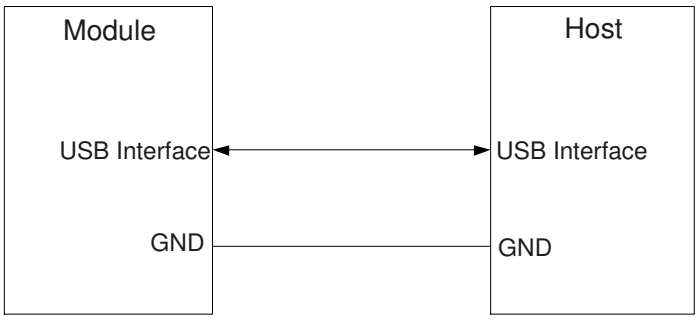

Figure 4: Sleep Mode Application with USB Remote Wakeup

The module and the host will wake up in the following conditions:

- Sending data to the module through USB will wake up the module.
- When the module has a URC to report, it will send remote wake-up signals via USB to wake up the host.

3.1.2. Airplane Mode

The module provides a W_DISABLE1# pin to disable or enable airplane mode through hardware operation. See ***Chapter 4.4.1*** for more details.

3.2. Communication Interface with a Host

The module supports to communicate through both USB and PCIe interfaces, respectively referring to the USB mode and the PCIe mode as described below:

USB Mode

- Supports all USB 2.0/3.1 features
- Supports MBIM/QMI/QRTR/AT over USB interface
- Communication can be switched to PCIe mode by AT command

USB is the default communication interface between the module and the host. To use PCIe interface for the communication between a host, an AT command under USB mode can be used. For more details about the AT command, see ***document [4]***.

It is suggested that USB 2.0 interface be reserved for firmware upgrade.

USB-AT-based PCIe Mode

- Supports MBIM/QMI/QRTR/AT over PCIe interface
- Supports AT over USB interface
- Communication can be switched back to USB mode by AT command

When the module works at the USB-AT-based (switched from USB mode by AT command) PCIe mode, it supports MBIM/QMI/QRTR/AT, and can be switched back to USB mode by AT command.

For USB-AT-based PCIe mode, the firmware upgrade via PCIe interface is not supported, so USB 2.0 interface must be reserved for the firmware upgrade.

eFuse-based PCIe Mode

- Supports MBIM/QMI/QRTR/AT over PCIe interface
- Supports Non-X86 systems and X86 system (supports BIOS PCIe early initial)

The module can also be reprogrammed to PCIe mode based on eFuse. If switched to PCIe mode by burnt eFuse, the communication cannot be switched back to USB mode.

Note that if the host does not support firmware upgrade through PCIe, the firmware can be upgraded by the 5G-M2 EVB, which could be connected to PC with a USB type-B cable. For more details, see ***document [3]***.

3.3. Power Supply

The following table shows pin definition of VCC pins and ground pins.

Table 7: Definition of VCC and GND Pins

Pin	Pin Name	I/O	Description	DC Characteristics
2, 4, 70, 72, 74	VCC	PI	Power supply for the module	Vmin = 3.135 V Vnom = 3.7 V Vmax = 4.4 V
3, 5, 11, 27, 33, 39, 45, 51, 57, 71, 73	GND		Ground	

3.3.1. Voltage Stability Requirements

The power supply range of the module is from 3.135 V to 4.4 V. Please ensure that the input voltage will never drop below 3.135 V, otherwise the module will power off automatically. The voltage ripple of the input power supply should be less than 100 mV. The figure below shows the power supply limits during burst transmission when 3.3 V power supply is applied.

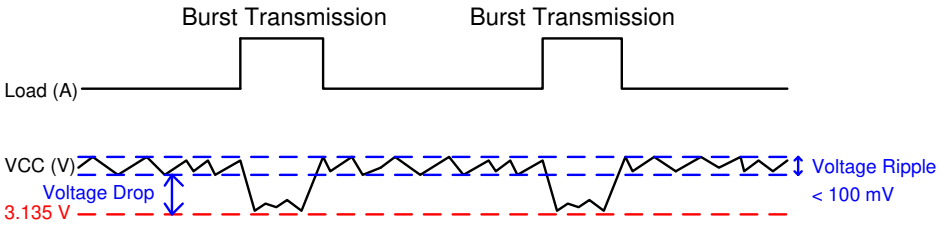

Figure 5: Power Supply Limits during Burst Transmission

Ensure the continuous current capability of the power supply is 3.0 A at least. To decrease the voltage drop, two bypass capacitors of 220 µF with low ESR should be used, and a multi-layer ceramic chip capacitor (MLCC) array should also be used due to its ultra-low ESR. It is recommended to use ceramic capacitors (100 nF, 6.8 nF, 220 pF, 68 pF, 15 pF, 9.1 pF, 4.7 pF) for composing the MLCC array, and place these capacitors close to VCC pins. The width of VCC trace should be no less than 3 mm. In principle, the longer the VCC trace is, the wider it should be.
In addition, to guarantee stability of the power supply, it is recommended to use a TVS with working peak

reverse voltage of 5 V.

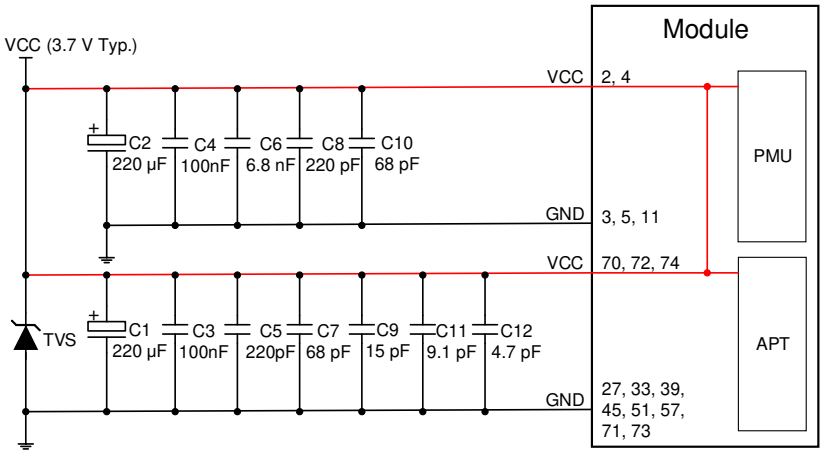

Figure 6: Reference Circuit for VCC

3.3.2. Reference Design for Power Supply

The performance of the module largely depends on the power source. If the voltage difference between the input and output is not too big, it is suggested that an LDO should be used when supplying power for the module. If there is a big voltage difference between the input source and the desired output (VCC = 3.7 V Typ.), a buck DC-DC converter is preferred.

The following figure shows a reference design for +5.0 V input power source based on a DC-DC converter. The typical output of the power supply is about 3.7 V and the rated load current is 5.0 A.

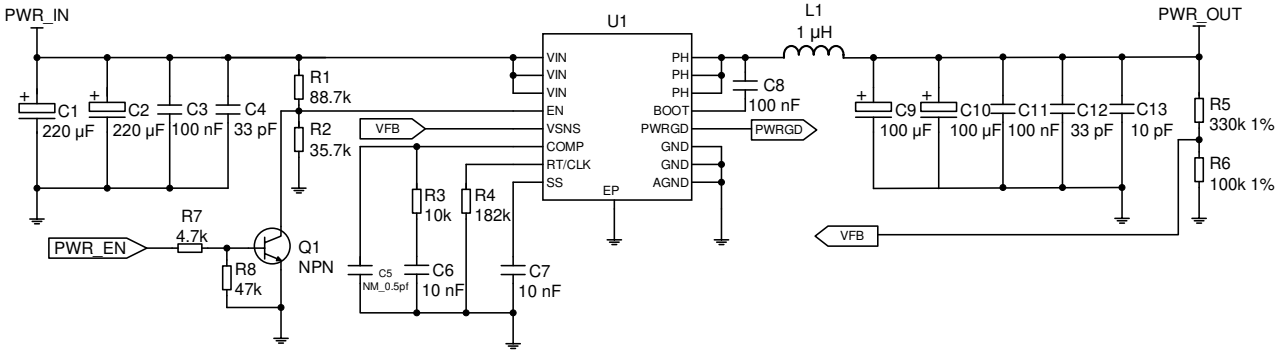

Figure 7: Reference Circuit for Power Supply

NOTE

To avoid damages to the internal flash, DO NOT cut off the power supply before the module is completely turned off by pulling down FULL_CARD_POWER_OFF# pin for more than 900 ms, and DO NOT cut off power supply directly when the module is working.

3.3.3. Power Supply Monitoring

AT+CBC can be used to monitor the voltage value of VCC.

3.4. Turn On

FULL_CARD_POWER_OFF# is used to turn on/off the module or reset the module through hard reset. This input signal is 3.3 V tolerant and can be driven by either 1.8 V or 3.3 V GPIO. And it has internally pulled down with a 100 kΩ resistor.

When FULL_CARD_POWER_OFF# is de-asserted (driven HIGH, ≥ 1.19 V), the module will turn on.

Table 8: Definition of FULL_CARD_POWER_OFF#

Pin No.	Pin Name	I/O	Description	DC Characteristics	Comment
6	FULL_CARD_ POWER_OFF#	DI, PD	Turn on/off the module. High level: Turn on Low level: Turn off	V_{IH}max = 4.4 V V_{IH}min = 1.19 V V_{IL}max = 0.2 V	Pull down with a 100 kΩ resistor.

It is recommended to use a host GPIO to control FULL_CARD_POWER_OFF#. A simple reference circuit is illustrated by the following figure.

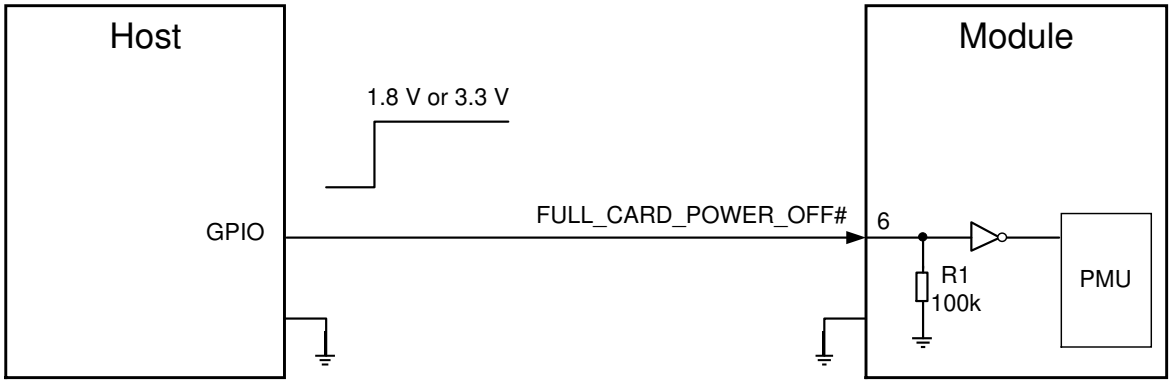

NOTE: The voltage of pin 6 should be no less than 1.19 V when it is at HIGH level.

Figure 8: Turn On the Module with a Host GPIO

The timing of turn-on scenario is illustrated by the following figure.

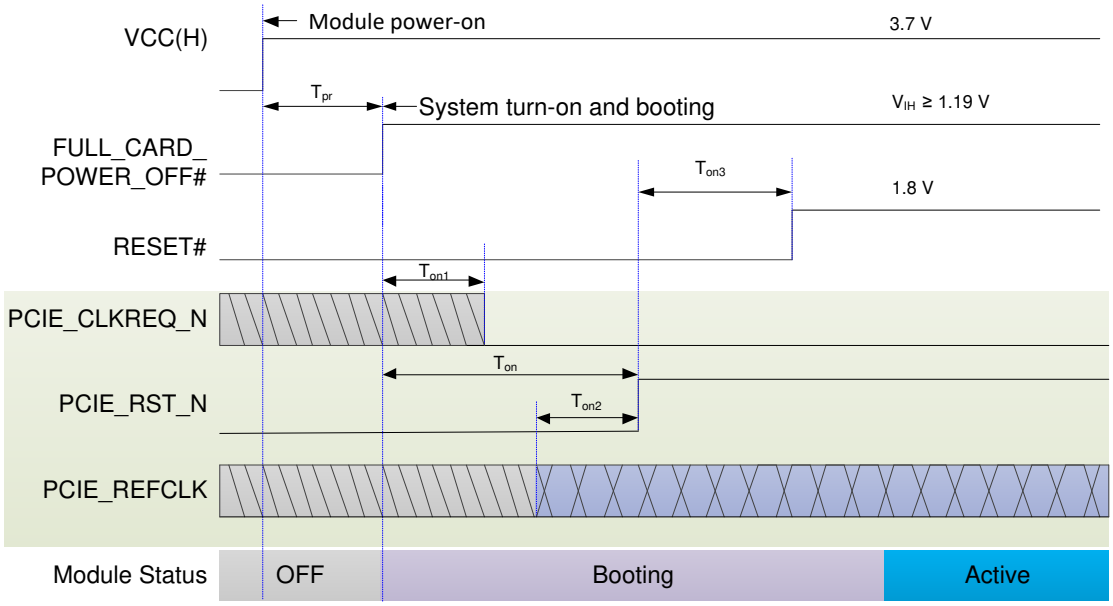

NOTE: When the module is in USB mode, please ignore the PCIe related signals and their timing parameters in the figure.

Figure 9: Turn-on Timing of the Module

Table 9: Turn-on Timing of the Module

Symbol	Min.	Typ.	Max.	Comment
T_{pr}	100 ms	-	-	System turn-on time depending on the host.
T_{on1}	-	-	T_{on} - T_{on2}	The period when the module requests the PCIe clock from the host.
T_{on}	100 ms		-	The period when the host GPIO controls the module to exit the PCIe reset state.
T_{on2}	100 µs	-	-	The period during which PCIE_REFCLK_P/M is stable before PCIE_RST_N is inactive.
T_{on3}	-	-	390 ms	The time delay when RESET# is pulled up internally after PCIE_RST_N is de-asserted. Do not pull down RESET# before the module is powered on. The time will continue to be updated.

3.5. Turn Off

For the design that turns on the module with a host GPIO, when the power is supplied to VCC, driving FULL_CARD_POWER_OFF# pin LOW (≤ 0.2 V) or tri-stating the pin will turn off the module. Sending the

command **AT+CFUN=0** is necessary before shutting down the module.

The following is a proper shutdown handshake for FULL_CARD_POWER_OFF#, which complies with the M.2 specification. Only after this process is completed, can the module be successfully turned off by pulling down FULL_CARD_POWER_OFF#.

1. The host sends **AT+CFUN=0** to the module.
2. The module will do the essential shutdown tasks.
3. The module responds **OK**.

The timing of turn-off scenario is illustrated by the following figure.

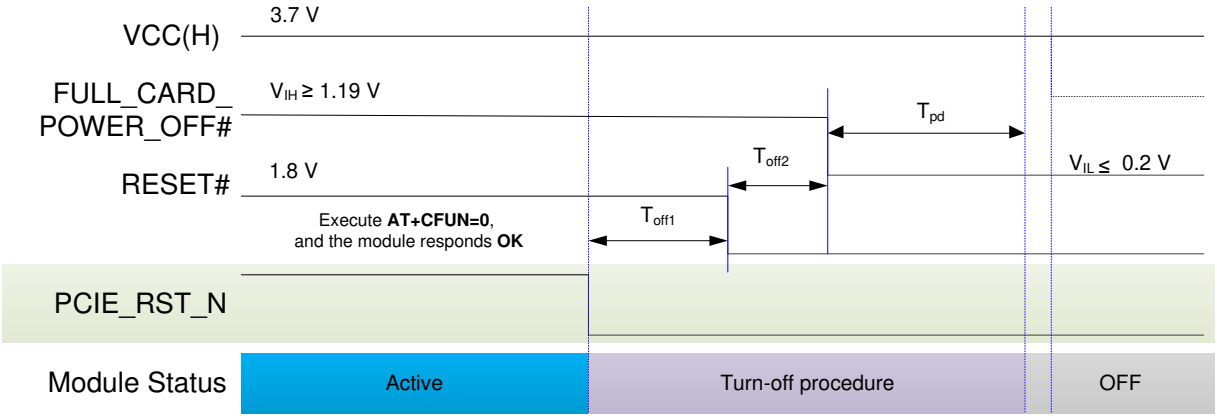

NOTE:
When the module is in USB mode, please ignore the PCIe related signals and their timing parameters in the figure.

Figure 10: Turn-off Timing through FULL_CARD_POWER_OFF#

Table 10: Turn-off Timing of the Module Through FULL_CARD_POWER_OFF#

Symbol	Min.	Typ.	Max.	Comment
T_{off1}	-	100 ms	-	The period from the host pulls down PCIE_RST_N to it pulls down RESET#
T_{off2}	0 ms	100 ms	-	The period from the host pulls down RESET# to it pulls down FULL_CARD_POWER_OFF#
T_{pd}	900 ms	-	-	The period from the host pulls down FULL_CARD_POWER_OFF# to the module turns off. It is recommended to cut off the VCC when the module has been turned off completely.

3.6. Reset

RESET# is an active LOW signal (1.8 V logic level). When this pin is asserted, the module will immediately enter reset condition.

Please note that triggering the RESET# signal will lead to loss of all data in the module and removal of system drivers. It will also disconnect the modem from the network.

Table 11: Definition of RESET# Pin

Pin No.	Pin Name	I/O	Description	DC Characteristics	Comment
67	RESET#	DI, PU	Reset the module. Active LOW	1.8 V	Internally pulled up to 1.8 V.

The module can be reset by pulling down the RESET#. An open collector/drain driver or a button can be used to control RESET#.

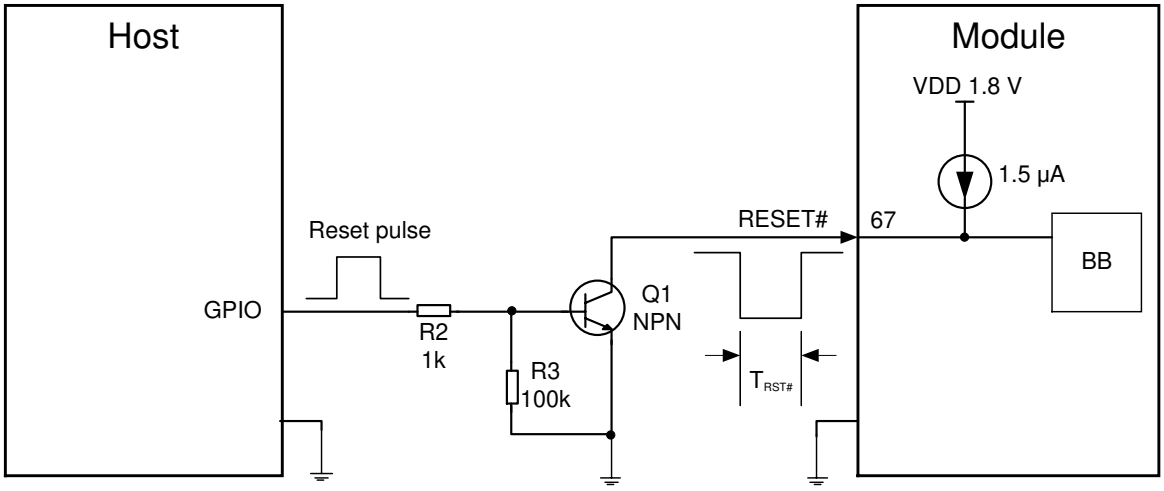

Figure 11: Reference Circuit for RESET# with NPN Driver Circuit

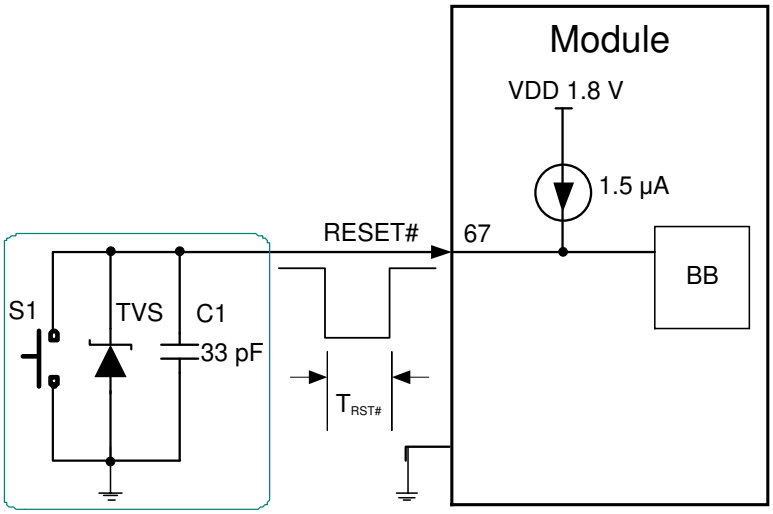

NOTE: The capacitor C1 is recommended to be less than 47 pF.

Figure 12: Reference Circuit for RESET# with a Button

For a warm reset when only the reset signal is pulled LOW, see the timing illustrated by the figure below. In this reset mode, the power of the module will not be turned off. This timing sequence is recommended for scenarios where the module is reset with a button.

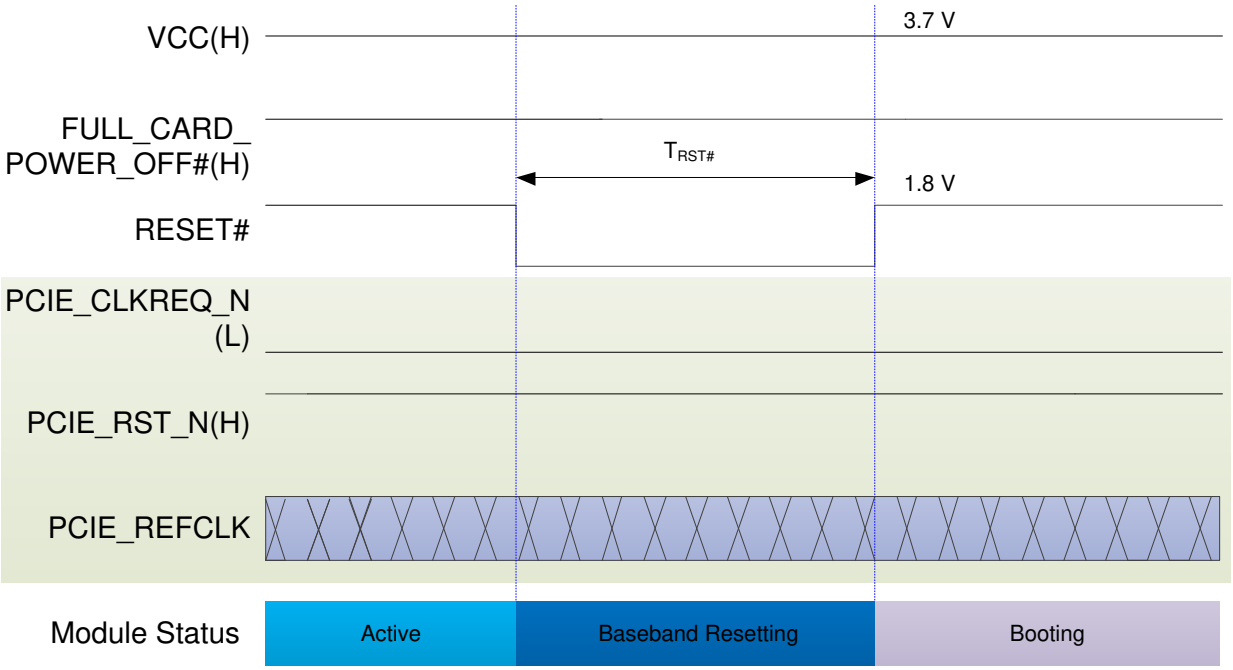

NOTE:
When the module is in USB mode, please ignore the PCIe related signals and their timing parameters in the figure.

Figure 13: Reset Timing of the Module's Warm Reset

Table 12: Reset Timing of the Module's Warm Reset

Symbol	Min.	Typ.	Max.	Comment
$T_{RST\#}$	200 ms	400 ms	-	Reset baseband chip IC only

For a hard reset, see the timing illustrated by the figure below. This timing sequence is recommended for scenarios where the module is reset with NPN driver circuit. Sending the command **AT+CFUN=0** is necessary before resetting the module.

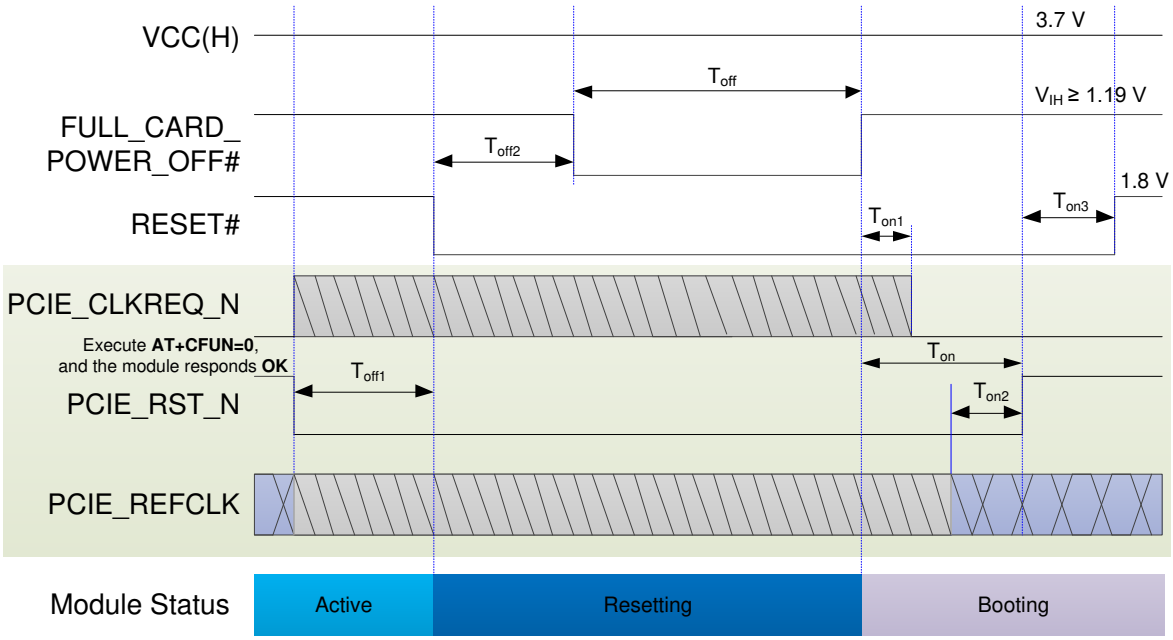

NOTE:

1. The timing parameters after the host pulls up FULL_CARD_POWER_OFF# refer to the booting timing of the PCIe mode in ***Chapter 3.4***.
2. When the module is in USB mode, please ignore the PCIe related signals and their timing parameters in the figure.

Figure 14: Reset Timing of the Module's Hard Reset

Table 13: Reset Timing of the Module's Hard Reset

Symbol	Min.	Typ.	Max.	Comment
T_{off1}	-	100 ms	-	The period from the host pulls down PCIE_RST_N to it pulls down RESET#.
T_{off2}	0 ms	100 ms	-	The period from the host pulls down RESET# to it pulls down FULL_CARD_POWER_OFF#.
T_{off}	900 ms	-	-	Module hard reset. Ensure that the module has been turned off completely.
T_{on1}	-	-	T_{on} - T_{on2}	The period when the module requests the PCIe clock from the host.

T_{on}	100 ms	-	-	The period when the host GPIO controls the module to exit the PCIe reset state.
T_{on2}	100 μs	-	-	The period during which REFCLK_P/M is stable before PCIE_RST_N is inactive.
T_{on3}	-	-	390 ms	RESET# signal will be pull up internally during the module's turn-on process. For the host, this time is the maximum period to be allowed to keep RESET# at low level. The time will continue to be updated.

4 Application Interfaces

The physical connections and signal levels of the module comply with the PCI Express M.2 specification. This chapter mainly describes the definition and application of the following interfaces/pins of the module:

- (U)SIM interfaces
- USB interface
- PCIe interface
- Control and indication interfaces
- Cellular/WLAN COEX interface*
- Antenna tuner control interface
- Configuration pins

4.1. (U)SIM Interfaces

The (U)SIM interface circuitry meets *ISO/IEC 7816-3,* ETSI and IMT-2000 requirements. Both Class B (3.0 V) and Class C (1.8 V) (U)SIM cards are supported.

4.1.1. Pin Definition of (U)SIM

The module has two (U)SIM interfaces, and supports dual SIM single standby.

Table 14: Pin Definition of (U)SIM Interfaces

Pin No.	Pin Name	I/O	Description	DC Characteristics
36	USIM1_VDD	PO	(U)SIM1 card power supply	USIM1_VDD 1.8/3.0 V
34	USIM1_DATA	DIO, PU	(U)SIM1 card data	USIM1_VDD 1.8/3.0 V
32	USIM1_CLK	DO, PD	(U)SIM1 card clock	USIM1_VDD 1.8/3.0 V
30	USIM1_RST	DO, PD	(U)SIM1 card reset	USIM1_VDD 1.8/3.0 V
66	USIM1_DET	DI, PD	(U)SIM1 card hot-plug detect	1.8 V

48	USIM2_VDD	PO	(U)SIM2 card power supply	USIM2_VDD 1.8/3.0V
42	USIM2_DATA	DIO, PU	(U)SIM2 card data	USIM2_VDD 1.8/3.0 V
44	USIM2_CLK	DO, PD	(U)SIM2 card clock	USIM2_VDD 1.8/3.0 V
46	USIM2_RST	DO, PD	(U)SIM2 card reset	USIM2_VDD 1.8/3.0 V
40	USIM2_DET	DI, PD	(U)SIM2 card hot-plug detect	1.8 V

4.1.2. (U)SIM Hot-Plug

The module supports (U)SIM card hot-plug via the (U)SIM card hot-plug detect pins (USIM1_DET and USIM2_DET), which is disabled by default. (U)SIM card is detected by USIM_DET interrupt. (U)SIM card insertion is detected by high/low level.

The following command enables or disables (U)SIM card hot-plug function. The level of (U)SIM card detection pin should also be set when the (U)SIM card is inserted.

AT+QSIMDET (U)SIM Card Detection	
Test Command **AT+QSIMDET=?**	Response **+QSIMDET: (**list of supported **<enable>**s**),(**list of supported **<insert_level>**s**)** **OK**
Read Command **AT+QSIMDET?**	Response **+QSIMDET: <enable>,<insert_level>** **OK**
Write Command **AT+QSIMDET=<enable>,<insert_level>**	Response **OK** If there is any error: **ERROR**
Maximum Response Time	300 ms
Characteristics	The command takes effect after the module is restarted. The configuration will be saved automatically.

Parameter

<enable>	Integer type. Enable or disable (U)SIM card detection. 0 Disable 1 Enable
<insert_level>	Integer type. The level of (U)SIM detection pin when a (U)SIM card is inserted. 0 Low level 1 High level

NOTE

1. Hot-plug function is invalid if the configured value of **<insert_level>** is inconsistent with hardware design.
2. The underlined value is the default.
3. USIM1_DET and USIM2_DET are pulled LOW by default, and will be internally pulled up to 1.8 V by software configuration only when (U)SIM hot-plug is enabled by **AT+QSIMDET**.

4.1.3. Normally Closed (U)SIM Card Connector

With a normally closed (U)SIM card connector, USIM_DET pin is shorted to ground when there is no (U)SIM card inserted. (U)SIM card detection by high level is applicable to this type of connector. Once (U)SIM hot-plug is enabled by executing **AT+QSIMDET=1,1**, a (U)SIM card insertion will drive USIM_DET from low to high level, and the removal of it will drive USIM_DET from high to low level.

- When the (U)SIM is absent, CD is shorted to ground and USIM_DET is at low level.
- When the (U)SIM is present, CD is open from ground and USIM_DET is at high level.

The following figure shows a reference design for (U)SIM interface with a normally closed (U)SIM card connector.

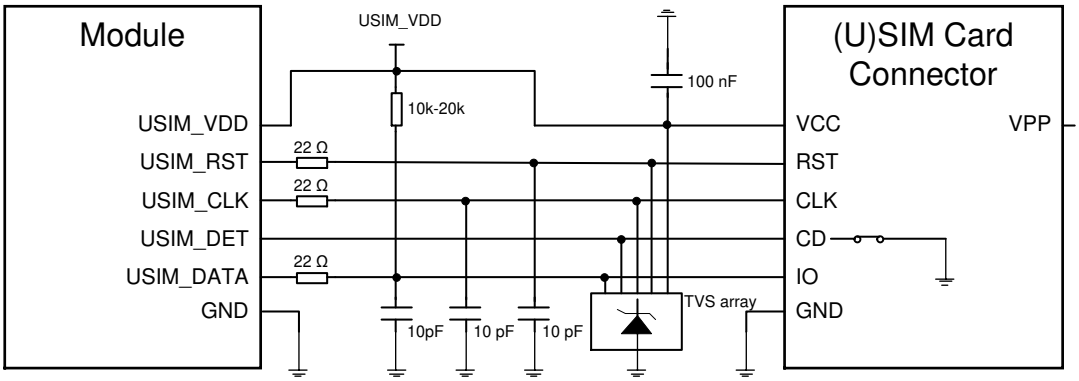

NOTE: All these resistors, capacitors and TVS should be close to (U)SIM card connector in PCB layout.

Figure 15: Reference Circuit for Normally Closed (U)SIM Card Connector

4.1.4. Normally Open (U)SIM Card Connector

With a normally open (U)SIM card connector, CD1 and CD2 of the connector are disconnected when there is no (U)SIM card inserted. (U)SIM card detection by low level is applicable to this type of connector. Once (U)SIM hot-plug is enabled by executing **AT+QSIMDET=1,0**, a (U)SIM card insertion will drive USIM_DET from high to low level, and the removal of it will drive USIM_DET from low to high level.

- When the (U)SIM is absent, CD1 is open from CD2 and USIM_DET is at high level.
- When the (U)SIM is present, CD1 is pull down to ground and USIM_DET is at low level.

The following figure shows a reference design for (U)SIM interface with a normally open (NO) (U)SIM card connector.

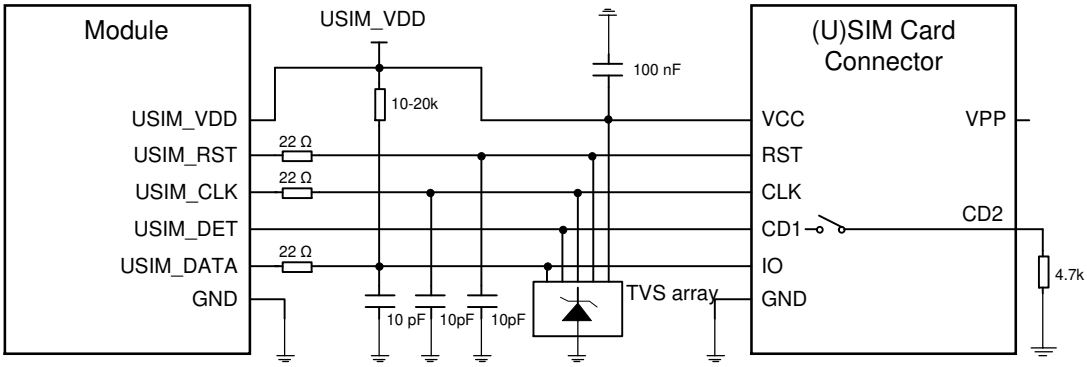

NOTE: All these resistors, capacitors and TVS should be close to (U)SIM card connector in PCB layout.

Figure 16: Reference Circuit for Normally Open (U)SIM Card Connector

4.1.5. (U)SIM Card Connector Without Hot-Plug

If (U)SIM card hot-plug is not needed, please keep USIM_DET unconnected. A reference circuit for (U)SIM card interface with a 6-pin (U)SIM card connector is illustrated by the following figure.

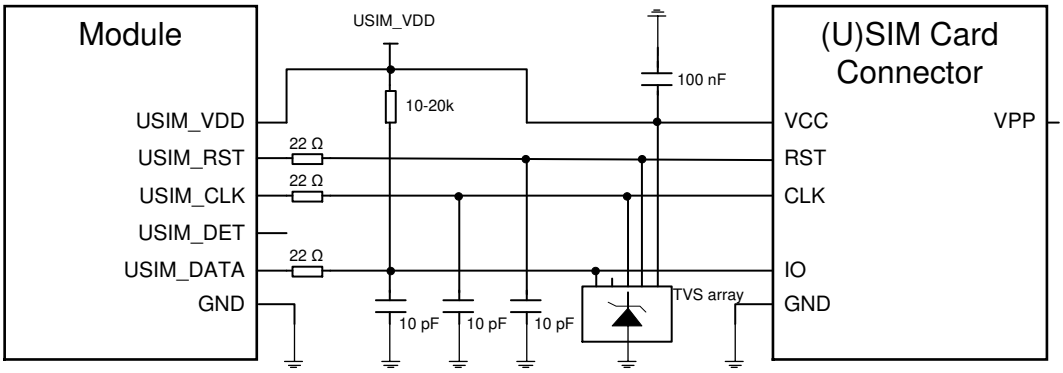

NOTE: All these resistors, capacitors and TVS should be close to (U)SIM card connector in PCB layout.

Figure 17: Reference Circuit for a 6-Pin (U)SIM Card Connector

4.1.6. (U)SIM2 Card Compatible Design

It should be noted that when the (U)SIM2 interface is used for an external (U)SIM card, the circuits are the same as those of (U)SIM1 interface. When the (U)SIM2 interface is used for the optional internal eSIM card, pins 40, 42, 44, 46 and 48 of the modules must be kept open.

A recommended compatible design for the (U)SIM2 interface is shown below.

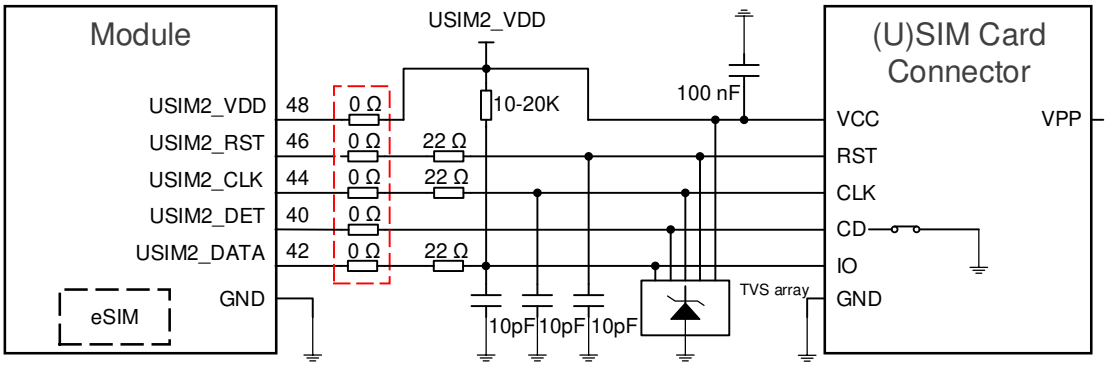

NOTE:
The five 0 Ω resistors must be placed close to the module, and all other components should be placed close to (U)SIM card connector in PCB layout.

Figure 18: Recommended Compatible Design for (U)SIM2 Interface

4.1.7. (U)SIM Design Notices

To enhance the reliability and availability of the (U)SIM card in applications, please follow the criteria below in (U)SIM circuit design.

- Place the (U)SIM card connector as close to the module as possible, (U)SIM card related resistance and capacitance and ESD protection devices should be placed close to the card connector. Keep the trace length less than 200 mm.
- Keep (U)SIM card signals away from RF and VCC traces.
- Ensure the ground between the module and the (U)SIM card connector is short and wide. Keep the trace width of ground and USIM_VDD no less than 0.5 mm to maintain the same electric potential.
- To avoid cross-talk between USIM_DATA and USIM_CLK, keep them away from each other and shield them with surrounded ground.
- To offer better ESD protection, add a TVS array of which the parasitic capacitance should be not higher than 10 pF. Add 22 Ω resistors in series between the module and the (U)SIM card connector to suppress EMI spurious transmission. The 10 pF capacitors are used to filter out RF interference.
- For USIM_DATA, a 10–20 kΩ pull-up resistor must be added near the (U)SIM card connector.

4.2. USB Interface

The module provides one integrated Universal Serial Bus (USB) interface which complies with the USB 3.1 Gen2 and USB 2.0 specifications and supports SuperSpeed (10 Gbps) on USB 3.1 and high-speed (480 Mbps) and full-speed (12 Mbps) modes on USB 2.0. The USB interface is used for AT command communication, data transmission, GNSS NMEA sentence output, software debugging, firmware upgrade (USB 2.0 only) and voice over USB*.

Please note that only USB 2.0 can be used for firmware upgrade currently.

Table 15: Pin Definition of USB Interface

Pin No.	Pin Name	I/O	Description	Comment
7	USB_DP	AIO	USB differential data (+)	Require differential impedance of 90 Ω
9	USB_DM	AIO	USB differential data (-)	
29	USB_SS_TX_M	AO	USB 3.1 super-speed transmit (-)	
31	USB_SS_TX_P	AO	USB 3.1 super-speed transmit (+)	
35	USB_SS_RX_M	AI	USB 3.1 super-speed receive (-)	
37	USB_SS_RX_P	AI	USB 3.1 super-speed receive (+)	

For more details about the USB 3.1 Gen2 and 2.0 specifications, please visit http://www.usb.org/home.

The USB 2.0 interface is recommended to be reserved for firmware upgrade in designs. The following figure shows a reference circuit of USB interface.

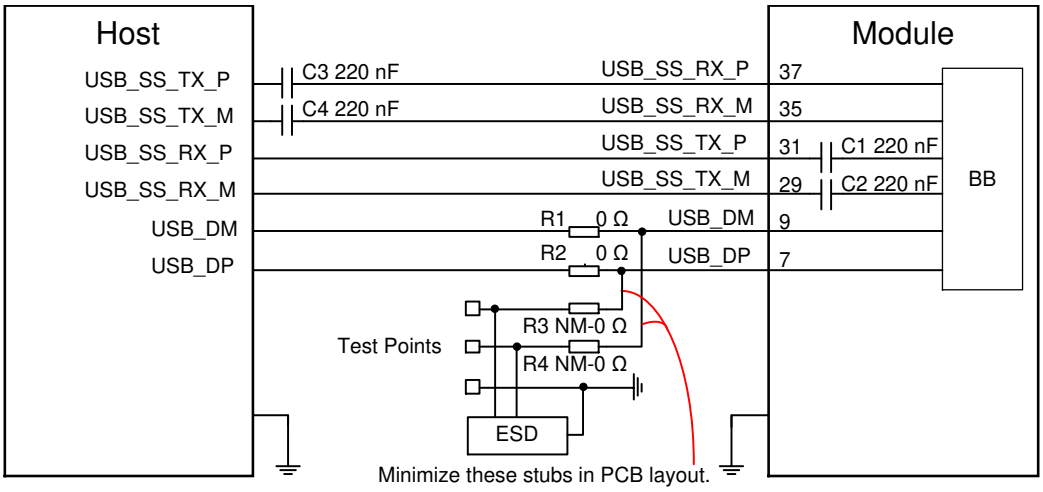

Figure 19: Reference Circuit of USB 3.1 & 2.0 Interfaces

AC coupling capacitors C3 and C4 must be placed close to the host and close to each other. C1 and C2 have been integrated inside the module, so do not place these two capacitors on your schematic and PCB. To ensure the signal integrity of USB 2.0 data traces, R1, R2, R3 and R4 must be placed close to the module, and the stubs must be minimized in PCB layout.

You should follow the principles below when designing for the USB interface to meet USB specifications.

- Route the USB signal traces as differential pairs with ground surrounded. The impedance of differential trace of USB 2.0 and USB 3.1 are 90 Ω.
- For USB 2.0 signal traces, the trace length should be less than 225 mm and the intra-pair length matching (P/M) should be less than 2 mm. For USB 3.1, the intra-pair length matching (P/M) should be less than 0.7 mm, while the inter-pair length matching (Tx/Rx) should be less than 10 mm.
- Do not route signal traces under crystals, oscillators, magnetic devices, PCIe and RF signal traces. Route the USB differential traces in inner-layer of the PCB, and surround the traces with ground on the same layer and with ground planes above and below.
- Junction capacitance of the ESD protection device might cause influences on USB data traces, so you should pay attention to the selection of the device. Typically, the stray capacitance should be less than 1.0 pF for USB 2.0, and less than 0.15 pF for USB 3.1.
- Keep the ESD protection devices as close to the USB connector as possible.
- If possible, reserve 0 Ω resistors on USB_DP and USB_DM traces respectively.

Table 16: USB Trace Length Inside the Module

Signal	Pin No.	Length (mm)	Length Difference (mm)
USB_DP	7	19.44	0.02
USB_DM	9	19.42	
USB_SS_RX_P	37	11.97	0.14
USB_SS_RX_M	35	11.83	
USB_SS_TX_P	31	8.33	0.28
USB_SS_TX_M	29	8.05	

4.3. PCIe Interface

The module provides one integrated PCIe (Peripheral Component Interconnect Express) interface.

- *PCI Express Base Specification Revision 4.0* compliant
- Data rate up to 16 Gbps

4.3.1. PCIe Operating Mode

The module supports endpoint (EP) mode and root complex (RC) mode, and EP mode is the default. In EP mode, the module operates as a PCIe EP device, while in RC mode, as a PCIe root complex device.

AT+QCFG="pcie/mode" is used to set PCIe RC/EP mode.

AT+QCFG="pcie/mode" Set PCIe RC/EP Mode	
Write Command **AT+QCFG="pcie/mode"[,<mode>]**	Response If the optional parameter is omitted, query the current setting: **+QCFG: "pcie/mode",<mode>** **OK** If the optional parameter is specified, set PCIe RC/EP mode: **OK** If there is any error: **ERROR**
Maximum Response Time	300 ms
Characteristics	The command takes effect after the module is restarted. The configuration will be saved automatically.

Parameter

<mode>	Integer type. Set PCIe RC or EP mode. 0 PCIe EP mode. 1 PCIe RC mode.

NOTE

1. The underlined value is the default.
2. For more details about the command, see ***document [4]***.

4.3.2. Pin Definition of PCIe

The following table shows the pin definition of PCIe interface.

Table 17: Pin Definition of PCIe Interface

Pin No.	Pin Name	I/O	Description	Comment
55	PCIE_REFCLK_P	AIO	PCIe reference clock (+)	100 MHz. Require differential impedance of 85 Ω
53	PCIE_REFCLK_M	AIO	PCIe reference clock (-)	
49	PCIE_RX_P	AI	PCIe receive (+)	Require differential impedance of 85 Ω
47	PCIE_RX_M	AI	PCIe receive (-)	
43	PCIE_TX_P	AO	PCIe transmit (+)	Require differential impedance of 85 Ω
41	PCIE_TX_M	AO	PCIe transmit (-)	
50	PCIE_RST_N	DI [11]	PCIe reset Active LOW	1.8/3.3 V
52	PCIE_CLKREQ_N	OD [11]	PCIe clock request Active LOW	1.8/3.3 V
54	PCIE_WAKE_N	OD [11]	PCIe wake up Active LOW	1.8/3.3 V

[11] PCIE_RST_N behaves as DI in PCIe EP mode, and as OD in PCIe RC mode. PCIE_CLKREQ_N and PCIE_WAKE_N behave as OD in PCIe EP mode, and as DI in PCIe RC mode. PCIe EP mode is the default.

4.3.3. Reference Design for PCIe

The following figure shows a reference circuit for the PCIe interface.

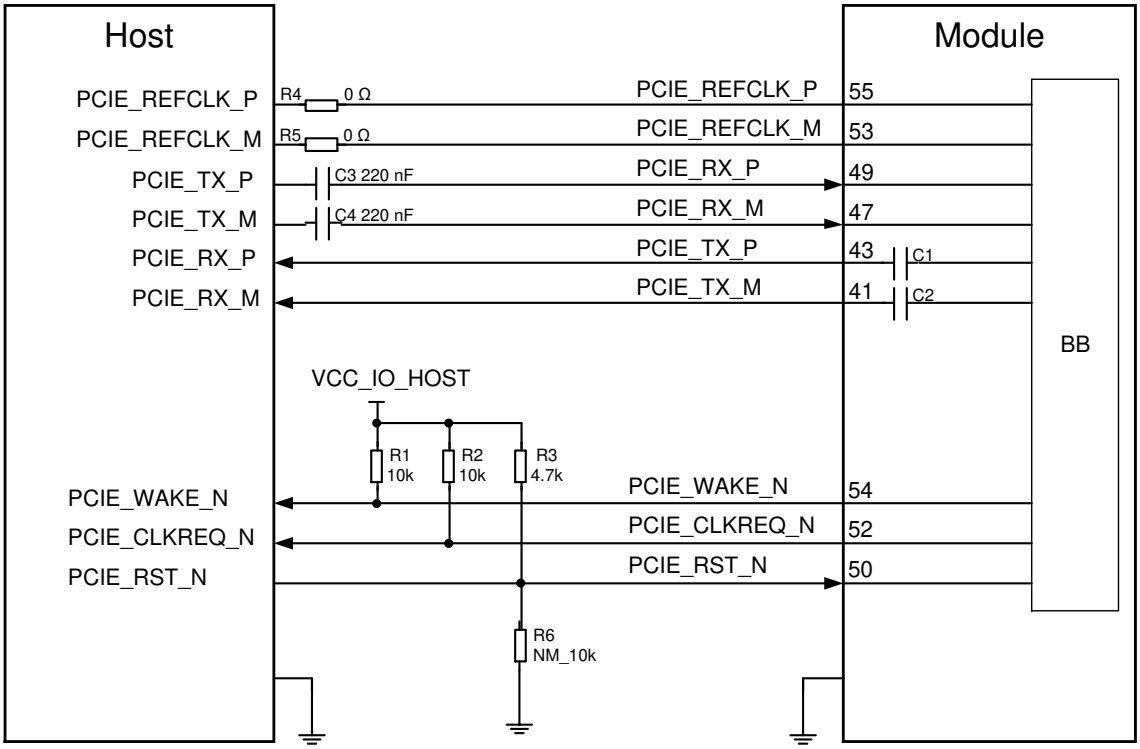

NOTE: The voltage level VCC_IO_HOST of these three signals depend on the host side due to open drain.

Figure 20: PCIe Interface Reference Circuit

To ensure the signal integrity of PCIe interface, AC coupling capacitors C3 and C4 should be placed close to the host on PCB. C1 and C2 have been integrated inside the module, so do not place these two capacitors on your schematic and PCB.

The following principles of PCIe interface design should be complied with to meet PCIe specification.

- Keep the PCIe data and control signals away from sensitive circuits and signals, such as RF, audio, crystal, and oscillator signals.
- Add a capacitor in series on Tx/Rx traces to prevent any DC bias.
- Keep the maximum trace length less than 200 mm.
- Keep the intra-pair length matching of each differential data pair (P/M) less than 0.7 mm.
- Keep the differential impedance of PCIe data trace as 85 Ω ±10 %.
- You must not route PCIe data traces under components or cross them with other traces.
- It is recommended to use a push-pull GPIO to output a low level that approaches 0 V rather than a pull-down resistor to get a low level. Otherwise, voltage division may be formed with the pull-up resistor inside the module, resulting in an uncertain 0 V voltage that could further lead to unpredictable problems.

Table 18: PCIe Trace Length Inside the Module

Signal	Pin No.	Length (mm)	Length Difference (mm)
PCIE_REFCLK_P	55	12.06	0.03
PCIE_REFCLK_M	53	12.03	
PCIE_TX_P	43	5.10	0.15
PCIE_TX_M	41	4.95	
PCIE_RX_P	49	12.02	0.04
PCIE_RX_M	47	11.98	

4.4. Control and Indication Interfaces

The following table shows the pin definition of control and indication pins.

Table 19: Pin Definition of Control and Indication Interfaces

Pin No.	Pin Name	I/O	Description	DC Characteristics	Comment
8	W_DISABLE1#	DI, PU	Airplane mode control Active LOW	1.8/3.3 V	Internally pulled up to 1.8 V with a 100 kΩ resistor.
26	W_DISABLE2#*	DI, PU	GNSS control Active LOW	1.8/3.3 V	
10	LED_WWAN#	OD	RF status LED indicator Active LOW	VCC	
23	WAKE_ON_WAN#	OD	Wake up the host Active LOW	1.8/3.3 V	
25	DPR*	DI, PU	Dynamic power reduction	1.8 V	

4.4.1. W_DISABLE1#

The module provides a W_DISABLE1# pin to disable or enable airplane mode through hardware operation. W_DISABLE1# is pulled up by default. Driving it LOW will set the module to airplane mode. In airplane mode, the RF function will be disabled.

The RF function can also be enabled or disabled through AT commands. The following table shows the

AT command and corresponding RF function status of the module.

Table 20: RF Function Status

W_DISABLE1# Logic Level	AT Command	RF Function Status	Operating Mode
HIGH	**AT+CFUN=1**	Enabled	Full functionality mode
	AT+CFUN=0	Disabled	Minimum functionality mode
	AT+CFUN=4		Airplane mode
LOW	**AT+CFUN=0** **AT+CFUN=1** **AT+CFUN=4**	Disabled	Airplane mode

4.4.2. W_DISABLE2#*

The module provides a W_DISABLE2# pin to disable or enable the GNSS function. The W_DISABLE2# pin is pulled up by default. Driving it LOW will disable the GNSS function. The combination of W_DISABLE2# pin and AT commands can control the GNSS function. For details about the AT commands, see ***document [5]***

Table 21: GNSS Function Status

W_DISABLE2# Logic Level	AT Commands	GNSS Function Status
HIGH	**AT+QGPS=1**	Enabled
HIGH	**AT+QGPSEND**	Disabled
LOW	**AT+QGPS=1**	Disabled
LOW	**AT+QGPSEND**	

A simple voltage level shifter based on diodes is used on W_DISABLE1# pin and W_DISABLE2# which are pulled up to a 1.8 V voltage in the module, as shown in the following figure. Therefore, the control signals (GPIO) of the host device could be at 1.8 V or 3.3 V voltage level. W_DISABLE1# and W_DISABLE2# are active LOW signals, and a reference circuit is shown as below.

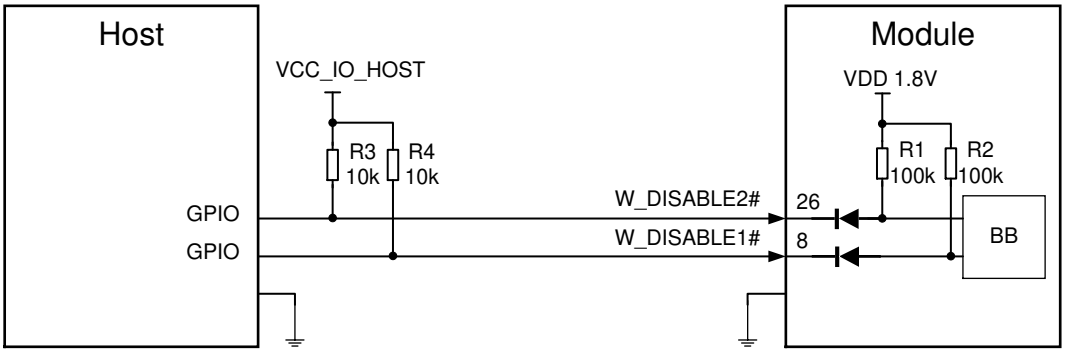

NOTE: The voltage level of VCC_IO_HOST could be 1.8 V or 3.3 V typically.

Figure 21: W_DISABLE1# and W_DISABLE2# Reference Circuit

4.4.3. LED_WWAN#

LED_WWAN# is used to indicate the RF status of the module, and its sink current is up to 10 mA.

To reduce current consumption of the LED, a current-limited resistor must be placed in series with the LED, as illustrated in the figure below. The LED is ON when the LED_WWAN# signal is at low level.

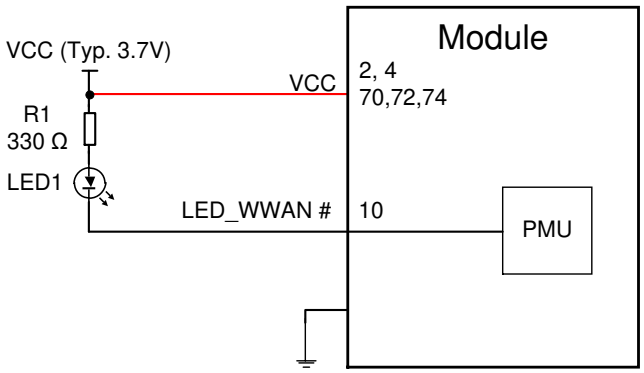

Figure 22: LED_WWAN# Reference Circuit

Table 22: Network Status Indications of LED_WWAN#

LED_WWAN# Logic Level	Description
LOW (LED on)	RF function is turned on
HIGH (LED off)	RF function is turned off if any of the following occurs: ● The (U)SIM card is not powered. ● W_DISABLE1# is at low level (airplane mode enabled). ● **AT+CFUN=4** (RF function disabled).

4.4.4. WAKE_ON_WAN#

The WAKE_ON_WAN# is an open drain pin, which requires a pull-up resistor on the host. When a URC returns, a one-second low level pulse signal will be outputted to wake up the host.

Table 23: State of the WAKE_ON_WAN#

WAKE_ON_WAN# State	Module Operation Status
Outputs a one-second pulse signal at low level	Call/SMS/data is incoming (to wake up the host)
Always at high level	Idle/sleep

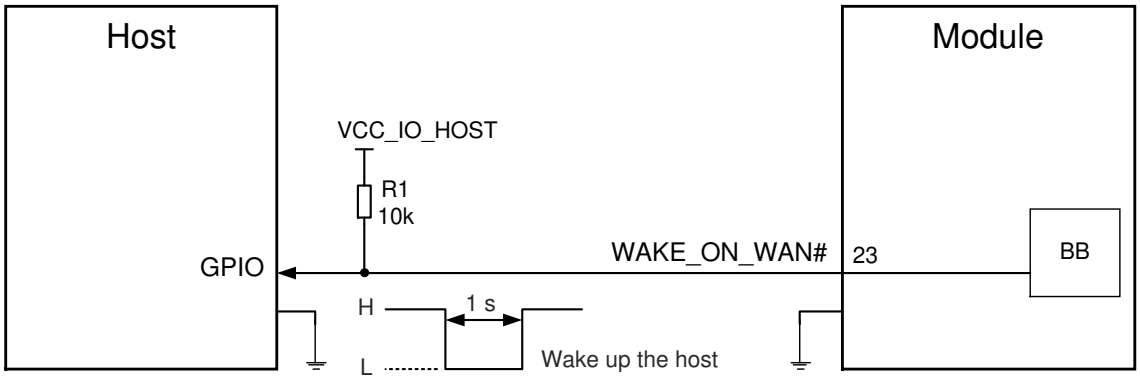

NOTE:
The voltage level on VCC_IO_HOST depends on the host side due to the open drain in pin 23.

Figure 23: WAKE_ON_WAN# Signal Reference Circuit

4.4.5. DPR*

The module provides the DPR (Dynamic Power Reduction) pin for body SAR (Specific Absorption Rate) detection. The signal is sent from the proximity sensor of the host system to the module to provide an input trigger, which will reduce the output power in radio transmission.

Table 24: Function of the DPR Signal

DPR Level	Function
HIGH/Floating	NO maximum transmitting power backoff
LOW	Maximum transmitting power backoff by **AT+QSAR**

NOTE

See ***document [4]*** for more details about **AT+QSAR**.

4.5. Cellular/WLAN COEX Interface*

The module provides the cellular/WLAN COEX interface, the following table shows the pin definition of this interface.

Table 25: Pin Definition of COEX Interface

Pin No.	Pin Name	I/O	Description	DC Characteristics
60	N79_TX_EN	DO	Notification from SDR to WLAN when n79 transmitting	1.8 V
38	WLAN_TX_EN	DI	Notification from WLAN to SDR when WLAN transmitting	1.8 V
62	COEX_RXD [12]	DI, PD	5G/LTE and WLAN coexistence receive	1.8 V
64	COEX_TXD [12]	DO, PD	5G/LTE and WLAN coexistence transmit	1.8 V

4.6. Antenna Tuner Control Interface

RFFE interface are used for antenna tuner control and should be routed to an appropriate antenna control circuit. More details about the interface will be added in the future version of this document.

Table 26: Pin Definition of Antenna Tuner Control Interface

Pin No.	Pin Name	I/O	Description	DC Characteristics
56	RFFE_CLK*	DO, PD	Used for external MIPI IC control	1.8 V
58	RFFE_DATA*	DIO, PD		1.8 V

[12] Please note that COEX_RXD and COEX_TXD cannot be used as general UART ports.

24	VDDIO_1V8	PO	Provide 1.8 V for external circuit	1.8 V Max. output current: 50 mA

NOTE

If RFFE function is required, please contact Quectel for more details.

4.7. Configuration Pins

The module provides four configuration pins, which are defined as below.

Table 27: Configuration Pins List of M.2 Specification

CONFIG_0 (Pin 21)	CONFIG_1 (Pin 69)	CONFIG_2 (Pin 75)	CONFIG_3 (Pin 1)	Module Type and Main Host Interface	Port Configuration
NC	GND	NC	NC	Quectel defined	2

Table 28: Configuration Pins of the Module

Pin No.	Pin Name	I/O	Description
21	CONFIG_0	DO	Not connected internally
69	CONFIG_1	DO	Connected to GND internally
75	CONFIG_2	DO	Not connected internally
1	CONFIG_3	DO	Not connected internally

The following figure shows a reference circuit of these four pins.

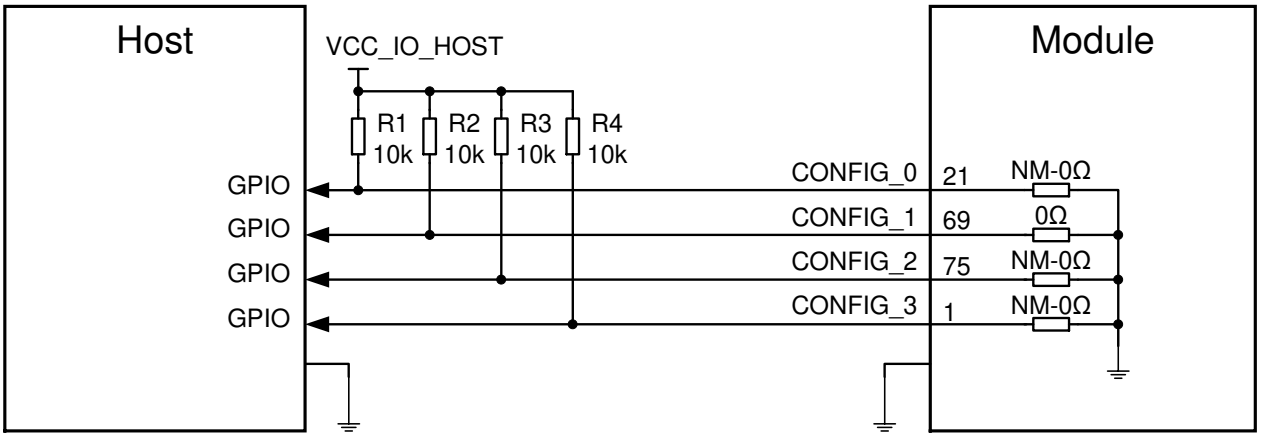

NOTE: The voltage level of VCC_IO_HOST depends on the host side and could be 1.8 V or 3.3 V.

Figure 24: Recommended Circuit for Configuration Pins

5 RF Characteristics

This chapter mainly describes RF characteristics of the module.

5.1. Antenna Interfaces

5.1.1. Pin Definition

The pin definition of antenna interfaces is shown below.

Table 29: RM520N-GL Pin Definition of Antenna Interfaces

Pin Name	I/O	Description	Comment
ANT0	AIO	Antenna 0 interface: **5G NR:** − Refarmed: LB TX0 /PRX & MHB TX0 /PRX & UHB TX1/DRX − n41 TX0/PRX − n77/n78/n79 TX1/DRX **LTE:** LB TX0/PRX & MHB TX0/PRX & UHB TX1/DRX **WCDMA:** LMB TRX	LB: 617–960 MHz MHB: 1452–2690 MHz UHB: 3400–3800 MHz n77/n78: 3300–4200 MHz n79: 4400–5000 MHz LAA: 5150-5925 MHz
ANT1	AIO	Antenna 1 interface: **5G NR:** − Refarmed: MHB PRX MIMO & UHB PRX MIMO − n41 PRX MIMO − n77/n78/n79 PRX MIMO **LTE:** MHB PRX MIMO & UHB PRX MIMO & LAA PRX **GNSS:** L5	
ANT2	AIO	Antenna 2 interface: **5G NR:** − Refarmed: MHB TX1 [13]/ DRX MIMO & UHB TX0/PRX − n41 TX1/DRX MIMO	

[13] MHB TX1 will be active when supporting Sub 2.6 GHz EN-DC.

		– n77/n78/n79 TX0/PRX **LTE:** MHB TX1 [13]/DRX MIMO & UHB TX0/PRX
ANT3	AIO	Antenna 3 interface: **5G NR:** – Refarmed: LB TX1 / DRX & MHB DRX & UHB DRX MIMO – n41 DRX – n77/n78/n79 DRX MIMO **LTE:** LB TX1/DRX & MHB DRX & UHB DRX MIMO & LAA DRX **WCDMA:** LMB DRX **GNSS:** L1

5.1.2. Cellular Network

5.1.2.1. Rx Sensitivity

Table 30: RM520N-GL Conducted Receiving Sensitivity (Unit: dBm)

Mode	Frequency	Primary	Diversity	SIMO [14]	3GPP (SIMO)
WCDMA	WCDMA B1	-109.1	-110	-112	-106.7
	WCDMA B2	-109.5	-109.8	-112.5	-104.7
	WCDMA B4	-110.0	-109.8	-113	-106.7
	WCDMA B5	-111.4	-113.4	-114	-104.7
	WCDMA B8	-112.0	-113.8	-115	-103.7
	WCDMA B19	-112.4	-113.4	-115.5	-104.7
LTE	LTE-FDD B1 (10 MHz)	-97.3	-97.8	-101.7	-96.3
	LTE-FDD B2 (10 MHz)	-97.8	-97.7	-101.8	-94.3
	LTE-FDD B3 (10 MHz)	-97.6	-97.3	-102.2	-93.3
	LTE-FDD B4 (10 MHz)	-98.2	-97.8	-102.1	-96.3
	LTE-FDD B5 (10 MHz)	-100.3	-101.7	-103.6	-94.3

[14] SIMO is a smart antenna technology that uses a single antenna at the transmitter side and two antennas at the receiver side, which improves Rx performance.

	LTE-FDD B7 (10 MHz)	-97.1	-97.2	-101.1	-94.3
	LTE-FDD B8 (10 MHz)	-99.7	-101.8	-102.5	-93.3
	LTE-FDD B12(B17) (10 MHz)	-100.8	-102.1	-104.5	-93.3
	LTE-FDD B13 (10 MHz)	-98.7	-100.8	-102.4	-93.3
	LTE-FDD B14 (10 MHz)	-99.5	-99.4	-102.5	-93.3
	LTE-FDD B18 (10 MHz)	-100.3	-101.6	-103.8	-96.3
	LTE-FDD B19 (10 MHz)	-100.3	-99.7	-103.3	-96.3
	LTE-FDD B20 (10 MHz)	-100.5	-102.2	-104.4	-93.3
	LTE-FDD B25 (10 MHz)	-97.7	-97.5	-100.5	-92.8
	LTE-FDD B26 (10 MHz)	-100.3	-101.8	-104.1	-93.8
	LTE-FDD B28 (10 MHz)	-99.7	-99.9	-102.8	-94.8
	LTE-FDD B29 (10 MHz)	-98.2	-99.5	-101.5	TBD
	LTE-FDD B30 (10 MHz)	-97.3	-97.4	-101.2	-95.3
	LTE-FDD B32 (10 MHz)	-97.3	-98.4	-100.1	-95.3
	LTE-TDD B34 (10 MHz)	-97.8	-98.1	-101.0	-96.3
	LTE-TDD B38 (10 MHz)	-95.7	-96.6	-99.6	-96.3
	LTE-TDD B39 (10 MHz)	-98.7	-98.1	-100.6	-96.3
	LTE-TDD B40 (10 MHz)	-96.9	-96.7	-101.3	-96.3
	LTE-TDD B41 (10 MHz)	-95.7	-96.5	-100.3	-94.3
	LTE-TDD B42 (10 MHz)	-96.8	-97.7	-101.5	-95
	LTE-TDD B43 (10 MHz)	-97.1	-97.5	-102.6	-95
	LTE-TDD B46 (10 MHz)	-96.2	-96.5	-99.3	TBD
	LTE-TDD B48 (10 MHz)	-96.9	-97.6	-101.9	-95
	LTE-FDD B66 (10 MHz)	-98.0	-97.7	-101.4	-96.5
	LTE-FDD B71 (10 MHz)	-99.9	-100.7	-102.0	-94.2
5G NR	5G NR-FDD n1 (20 MHz)	-94.3	-95.1	-97.5	-94.0
	5G NR-FDD n2 (20 MHz)	-94.3	-94.7	-97.3	-92.0

5G NR-FDD n3 (20 MHz)	-94.5	-94.2	-97.2	-91.0
5G NR-FDD n5 (20 MHz)	-95.5	-97.6	-100.0	-91
5G NR-FDD n7 (20 MHz)	-94.5	-94.2	-96.2	-92.0
5G NR-FDD n8 (20 MHz)	-96.2	-97.7	-99.2	-90.0
5G NR-FDD n12 (15 MHz)	-96.7	-99.4	-100.7	-84.0
5G NR-FDD n13 (10MHz)	-97.6	-99.0	-101.0	-93.8
5G NR-FDD n14 (10 MHz)	-98.7	-98.4	-101.4	-93.8
5G NR-FDD n18 (15 MHz)	-98.0	-99.0	-101.5	-95.0
5G NR-FDD n20 (20 MHz)	-96.9	-98.9	-100.6	-90.0
5G NR-FDD n25 (20 MHz)	-94.6	-95.3	-99.1	-90.5
5G NR-FDD n26 (20 MHz)	-95.0	-97.7	-100.1	-87.6
5G NR-FDD n28 (20 MHz)	-96	-95.9	-98.3	-91.0
5G NR-FDD n29 (10 MHz)	TBD	TBD	TBD	TBD
5G NR-FDD n30 (10 MHz)	-95.4	-97.0	-98.8	-95.8
5G NR-TDD n38 (20 MHz)	-93.4	-94.0	-96.7	-94.0
5G NR-TDD n40 (20 MHz)	-93.8	-94.8	-97.3	-94.0
5G NR-TDD n41 (100 MHz)	-85.8	-86.8	-91.3	-84.7
5G NR-FDD n48 (20 MHz)	-96.6	-96.6	-99.5	-93.0
5G NR-FDD n66 (40 MHz)	-92.3	-93.0	-94.3	-90.1
5G NR-FDD n70 (20 MHz)	-94.5	-95.1	-97.7	-93.8
5G NR-FDD n71 (20 MHz)	-96.5	-96.0	-99.1	-86.0
5G NR-FDD n75 (20 MHz)	TBD	TBD	TBD	TBD
5G NR-FDD n76 (5 MHz)	TBD	TBD	TBD	TBD
5G NR-TDD n77 (100 MHz)	-87.4	-88.6	-92.0	-85.1
5G NR-TDD n78 (100 MHz)	-87.7	-88.9	-92.1	-85.6
5G NR-TDD n79 (100 MHz)	-87.2	-88.1	-92.5	-85.6

5.1.2.2. Tx Power

The following table shows the RF output power of the module.

Table 31: Cellular Output Power

Mode	Frequency	Max.	Min.
WCDMA	WCDMA bands	24 dBm +1/-3 dB (Class 3)	< -50 dBm
LTE	LTE bands	23 dBm ±2 dB (Class 3)	< -40 dBm
	LTE HPUE bands (B38/B41/B42/B43)	26 dBm ±2 dB (Class 2)	< -40 dBm
5G NR	5G NR bands	23 dBm ±2 dB (Class 3)	< -40 dBm [15]
	5G NR HPUE bands (n38/n40/n41/n77/n78/n79)	26 dBm +2/-3 dB (Class 2)	< -40 dBm [15]

5.1.3. GNSS

The module includes a fully integrated global navigation satellite system solution (GPS, GLONASS, BDS, Galileo and QZSS).

The module supports standard NMEA 0183 protocol, and outputs NMEA sentences at 1 Hz data update rate via USB interface by default.

The GNSS engine is switched off by default. It has to be switched on via AT command.

5.1.3.1. GNSS Frequency

Table 32: GNSS Frequency

Bands	Type	Frequency	Unit
L1	GPS/Galileo/QZSS	1575.42 ±1.023 (L1)	MHz
	Galileo	1575.42 ±2.046 (E1)	MHz
	QZSS	1575.42 (L1)	MHz

[15] For 5G NR TDD bands, the normative reference for this requirement is *TS 38.101-1 clause 6.3.1.*

	GLONASS	1597.5–1605.8	MHz
	BDS	1561.098 ±2.046	MHz
L5	GPS/Galileo/QZSS	1176.45 ±10.23 (GPS L5)	MHz

5.1.3.2. GNSS Performance

The following table shows GNSS performance of the module.

Table 33: GNSS Performance

Parameter	Description	Conditions	Typ.	Unit
Sensitivity	Acquisition	Autonomous	-147	dBm
	Reacquisition	Autonomous	-160	dBm
	Tracking	Autonomous	-160	dBm
TTFF	Cold start @ open sky	Autonomous	27.93	s
		XTRA enabled	19.25	s
	Warm start @ open sky	Autonomous	11.55	s
		XTRA enabled	0.94	s
	Hot start @ open sky	Autonomous	1.09	s
		XTRA enabled	0.79	s
Accuracy	CEP-50	Autonomous @ open sky	1.35	m

NOTE

1. Acquisition sensitivity: the minimum GNSS signal power at which the module can fix position successfully within 3 minutes after executing cold start command.
2. Reacquisition sensitivity: the minimum GNSS signal power required for the module to maintain lock within 3 minutes after loss of lock.
3. Tracking sensitivity: the minimum GNSS signal power at which the module can maintain lock (keep positioning for at least 3 minutes continuously).

5.2. Antenna Connectors

5.2.1. Antenna Connector Specifications

The module is mounted with standard 2 mm × 2 mm receptacle antenna connectors for convenient antenna connection. The antenna connector's PN is IPEX 20579-001E, and the connector dimensions are illustrated as below:

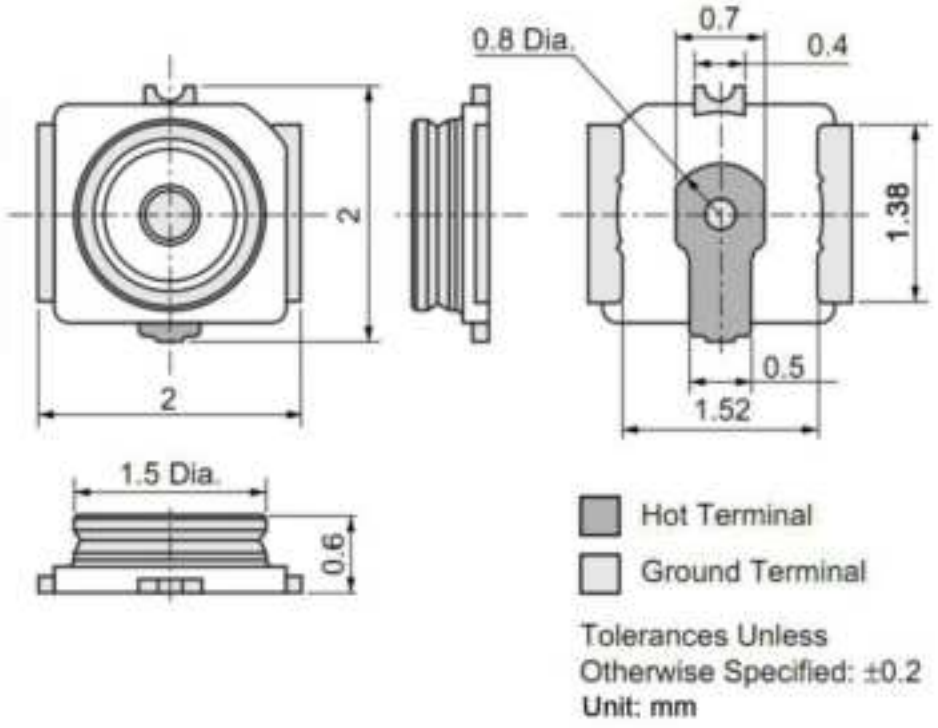

Figure 25: Dimensions of the Receptacle (Unit: mm)

Table 34: Major Specifications of the RF Connector

Item	Specification
Nominal Frequency Range	DC to 6 GHz
Nominal Impedance	50 Ω
Temperature Rating	-40 °C to +85 °C
Voltage Standing Wave Ratio (VSWR)	Meet the requirements of: Max 1.3 (DC–3 GHz) Max 1.4 (3–6 GHz)

5.2.2. Antenna Connector Location

The module has four antenna connectors: ANT0, ANT1, ANT2, and ANT3, which are shown below.

Figure 26: RM520N-GL Antenna Connectors

5.2.3. Antenna Connector Installation

The receptacle RF connector used in conjunction with the module will accept two types of mating plugs that will meet a maximum height of 1.2 mm using a Ø 0.81 mm coaxial cable or a maximum height of 1.45 mm utilizing a Ø 1.13 mm coaxial cable.

The following figure shows the specifications of mating plugs using Ø 0.81 mm coaxial cables.

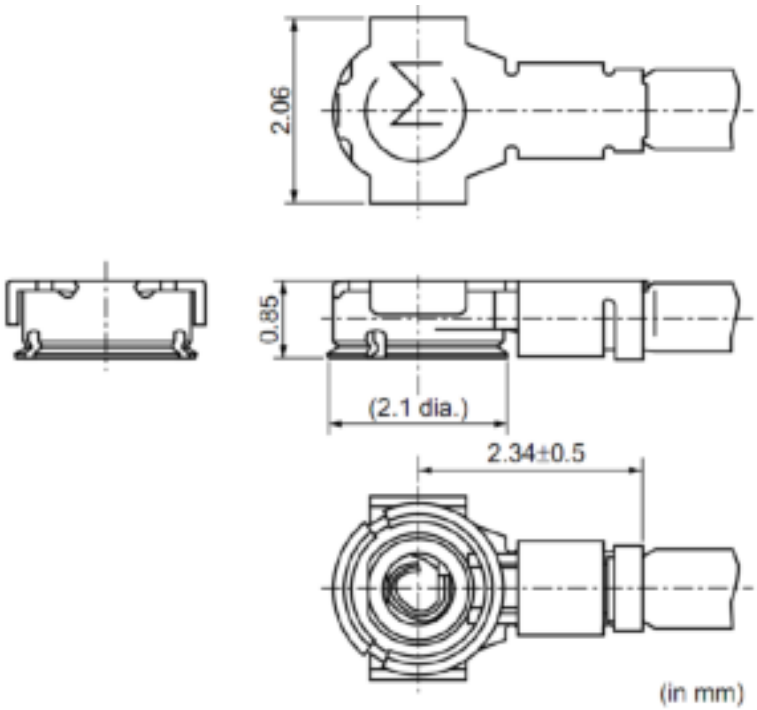

Figure 27: Dimensions of Mated Plugs (Ø0.81/Ø1.13 mm Coaxial Cables) (Unit: mm)

The following figure illustrates the connection between the receptacle RF connector on the module and the mating plug using a Ø 0.81 mm coaxial cable.

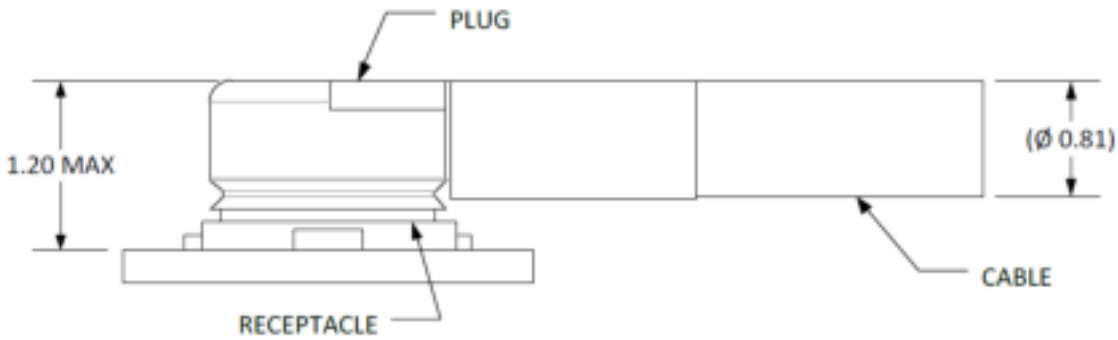

Figure 28: Space Factor of Mated Connectors (Ø 0.81 mm Coaxial Cables) (Unit: mm)

The following figure illustrates the connection between the receptacle RF connector on the module and the mating plug using a Ø 1.13 mm coaxial cable.

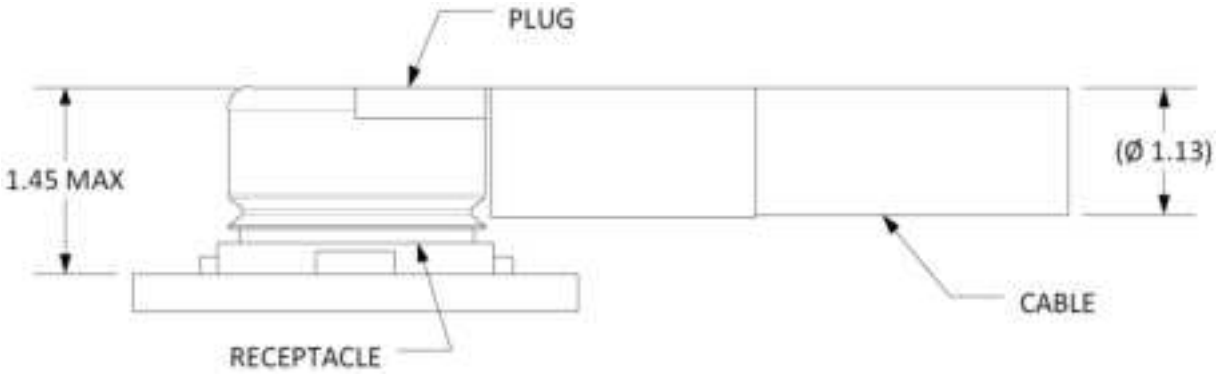

Figure 29: Space Factor of Mated Connectors (Ø 1.13 mm Coaxial Cables) (Unit: mm)

5.2.4. Recommended RF Connector Installation

5.2.4.1. Assemble Coaxial Cable Plug Manually

The illustration for plugging in a coaxial cable plug is shown below, θ = 90° is acceptable, while θ ≠ 90° is not.

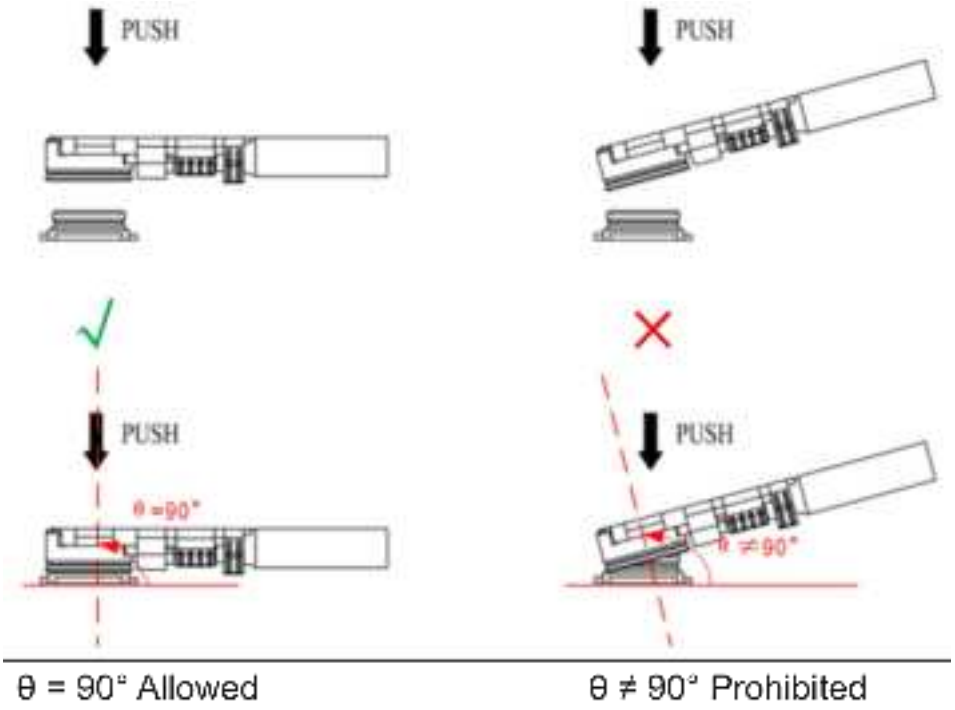

Figure 30: Plug in a Coaxial Cable Plug

The illustration of pulling out the coaxial cable plug is shown below, θ = 90° is acceptable, while θ ≠ 90° is not.

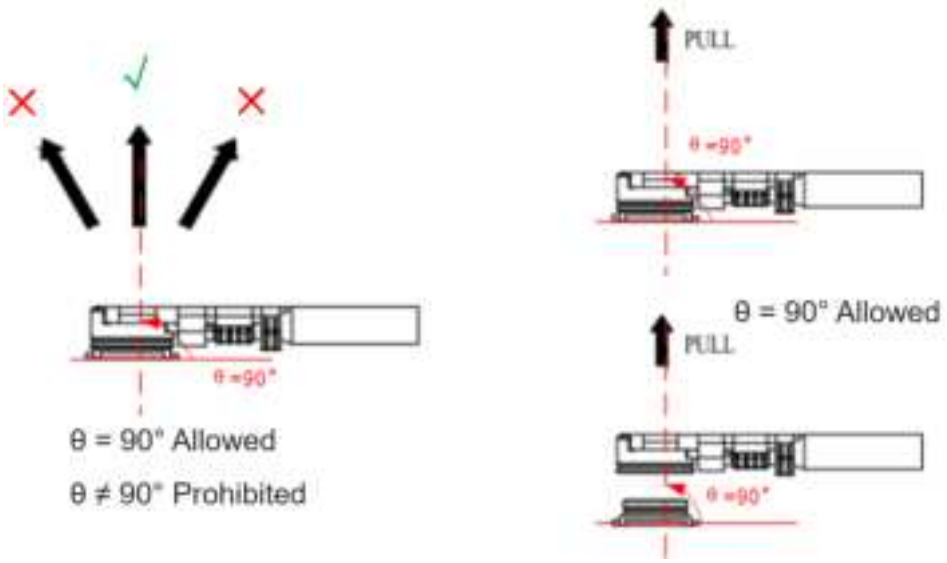

Figure 31: Pull out a Coaxial Cable Plug

5.2.4.2. Assemble Coaxial Cable Plug with Jig

The pictures of installing the coaxial cable plug with a jig is shown below, θ = 90° is acceptable, while θ ≠ 90° is not.

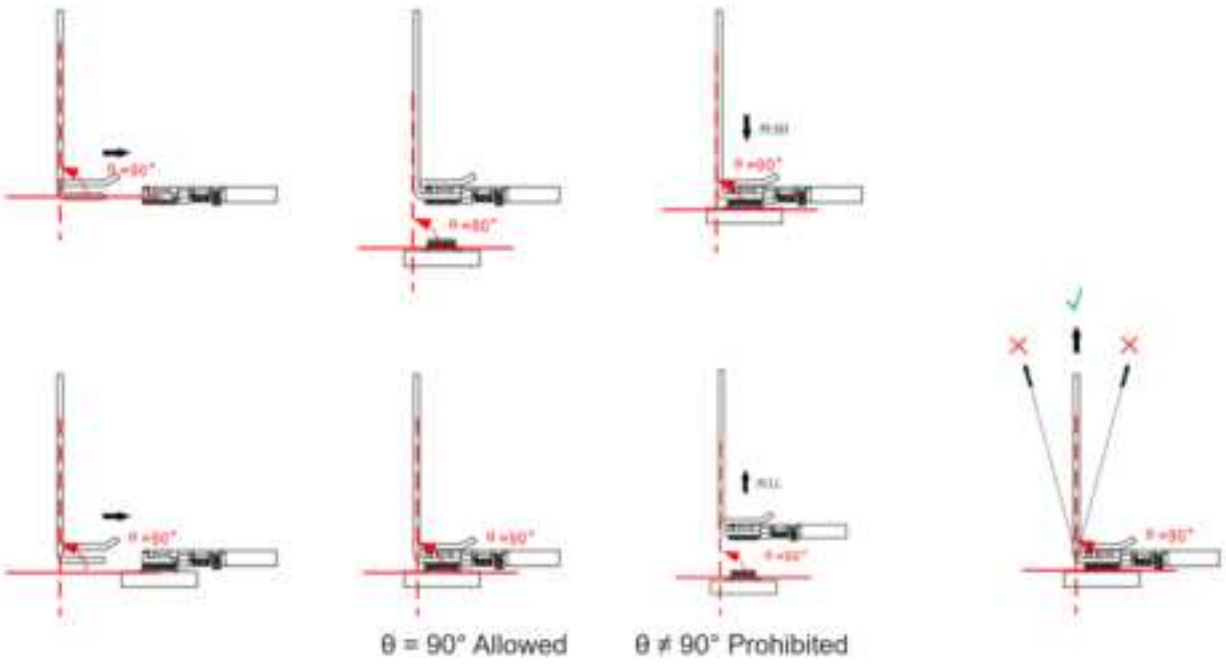

Figure 32: Install the Coaxial Cable Plug with Jig

5.2.5. Recommended Manufacturers of RF Connector and Cable

RF connectors and cables by I-PEX are recommended. For more details, visit https://www.i-pex.com.

5.3. Antenna Requirements

The following table shows the requirements on WCDMA, LTE, 5G NR antenna and GNSS antennas.

Table 35: Antenna Requirements

Type	Requirements
WCDMA/LTE/5G NR	● VSWR: ≤ 3 ● Efficiency: > 30 % ● Input Impedance: 50 Ω ● Cable insertion loss: − < 1 dB: LB (<1 GHz) − < 1.5 dB: MB (1–2.3 GHz) − < 2 dB: HB (> 2.3 GHz)
GNSS	● Frequency range: L1: 1559–1609 MHz L5: 1166–1187 MHz ● Polarization: RHCP or linear ● VSWR: < 2 (Typ.) ● Passive antenna gain: > 0 dBi

NOTE

It is recommended to use a passive GNSS antenna when LTE B13 or B14 is supported, as the use of active antenna may generate harmonics which will affect the GNSS performance.

6 Electrical Characteristics and Reliability

6.1. Power Supply Requirements

The typical input voltage of the module is 3.7 V, the following table shows the power supply requirements of the module.

Table 36: Power Supply Requirements

Parameter	Description	Min.	Typ.	Max.	Unit
VCC	Power Supply	3.135	3.7	4.4	V
Voltage Ripple		-	30	100	mV

6.2. Power Consumption

Table 37: Averaged Current Consumption

Mode	Condition	Band/Combination	Typ.	Unit
Power-off	Power off	-	195	μA
RF Disabled	**AT+CFUN=0** (USB 3.1 suspend)	-	4.6	mA
	AT+CFUN=4 (USB 3.1 suspend)	-	4.7	mA
Sleep State	SA FDD PF = 64 (USB 3.1 suspend)	-	9.7	mA
	SA TDD PF = 64 (USB 3.1 suspend)	-	9.4	mA

Idle State	SA PF = 64 (USB 2.0 active)	-	51.0	mA
	SA PF = 64 (USB 3.1 active)	-	69.4	mA
LTE	LTE LB @ 24 dBm	B5	520	mA
	LTE MB @ 24 dBm	B1	1080	mA
	LTE HB @ 24 dBm	B7	970	mA
LTE CA	DL 3CA, 256QAM	CA_1A-3A-7A	1512	mA
	UL 1CA, 256QAM			
	Tx power @ 24 dBm			
5G SA (1 Tx)	5G NR LB @ 23 dBm	n5	460	mA
	5G NR MB @ 23 dBm	n1	970	mA
	5G NR HB @ 23 dBm	n7	740	mA
	5G NR UHB @ 26 dBm	n78	480	mA
5G SA (2 Tx)	5G NR UL 2 × 2 MIMO @ 26 dBm	n78	490	mA
LTE + 5G EN-DC	LTE DL, 256QAM	DC_3A_n78A	1168	mA
	LTE UL QPSK			
	NR DL, 256QAM			
	NR UL QPSK			
	LTE Tx Power @ 23 dBm			
	NR Tx Power @ 23 dBm			

NOTE

1. The power consumption test is performed with EVB at room temperature without any thermal dissipation measure.
2. The power consumption above is for reference only, please contact Quectel Technical Support for a detailed power consumption test report of the module.

6.3. Digital I/O Characteristic

Table 38: Logic Levels of 1.8 V Digital I/O

Parameter	Description	Min.	Max.	Unit
VDDIO_1V8	Supply voltage	1.7	1.94	V
V_{IH}	Input high voltage	0.65 × VDDIO_1V8	VDDIO_1V8 + 0.3	V
V_{IL}	Input low voltage	-0.3	0.35 × VDDIO_1V8	V
V_{OH}	Output high voltage	VDDIO_1V8 - 0.45	-	V
V_{OL}	Output low voltage	-	0.45	V

Table 39: Logic Levels of 3.3 V Digital I/O

Parameter	Description	Min.	Max.	Unit
3.3 V	Supply voltage	3.135	3.465	V
V_{IH}	Input high voltage	2.0	3.6	V
V_{IL}	Input low voltage	-0.5	0.8	V

Table 40: (U)SIM 1.8 V I/O Requirements

Parameter	Description	Min.	Max.	Unit
USIM_VDD	Power supply	1.65	1.95	V
V_{IH}	Input high voltage	0.7 × USIM_VDD	USIM_VDD + 0.3	V
V_{IL}	Input low voltage	-0.3	0.2 × USIM_VDD	V
V_{OH}	Output high voltage	0.8 × USIM_VDD	-	V
V_{OL}	Output low voltage	-	0.4	V

Table 41: (U)SIM 3.0 V I/O Requirements

Parameter	Description	Min.	Max.	Unit
USIM_VDD	Power supply	2.7	3.05	V
V_{IH}	Input high voltage	0.7 × USIM_VDD	USIM_VDD + 0.3	V
V_{IL}	Input low voltage	-0.3	0.2 × USIM_VDD	V
V_{OH}	Output high voltage	0.8 × USIM_VDD	-	V
V_{OL}	Output low voltage	-	0.4	V

6.4. ESD Protection

Static electricity occurs naturally and it may damage the module. Therefore, applying proper ESD countermeasures and handling methods is imperative. For example, wear anti-static gloves during the development, production, assembly and testing of the module; add ESD protection components to the ESD sensitive interfaces and points in the product design.

Table 42: Electrostatic Discharge Characteristics (Temperature: 25 ºC, Humidity: 40 %)

Tested Interfaces	Contact Discharge	Air Discharge	Unit
VCC, GND	±5	±10	kV
Antenna Interfaces	±4	±8	kV
Other Interfaces	±0.5	±1	kV

6.5. Thermal Dissipation

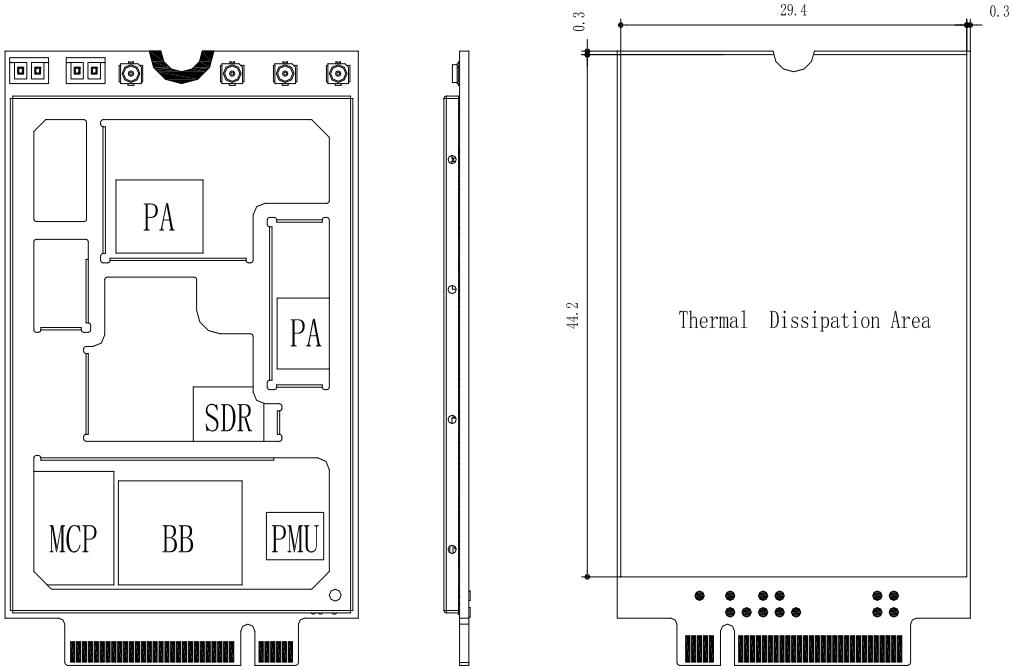

Figure 33: Thermal Dissipation Area Inside and on Bottom Side of the Module

The module offers the best performance when all internal IC chips are working within their operating temperatures. When the IC chip reaches or exceeds the maximum junction temperature, the module may still work but the performance and function (such as RF output power, data rate, etc.) will be affected to a certain extent. Therefore, the thermal design should be maximally optimized to ensure all internal IC chips always work within the recommended operating temperature range.

The following principles for thermal consideration are provided for reference:

- Keep the module away from heat sources on your PCB, especially high-power components such as processor, power amplifier, and power supply.
- Maintain the integrity of the PCB copper layer and drill as many thermal vias as possible.
- Expose the copper in the PCB area where module is mounted.
- Apply a soft thermal pad with appropriate thickness and high thermal conductivity between the module and the PCB to conduct heat.
- Follow the principles below when the heatsink is necessary:
  - Do not place large size components in the area where the module is mounted on your PCB to reserve enough place for heatsink installation.
  - Attach the heatsink to the shielding cover of the module; In general, the base plate area of the heatsink should be larger than the module area to cover the module completely;
  - Choose the heatsink with adequate fins to dissipate heat;

- Choose a TIM (Thermal Interface Material) with high thermal conductivity, good softness and good wettability and place it between the heatsink and the module;
- Fasten the heatsink with four screws to ensure that it is in close contact with the module to prevent the heatsink from falling off during the drop, vibration test, or transportation.

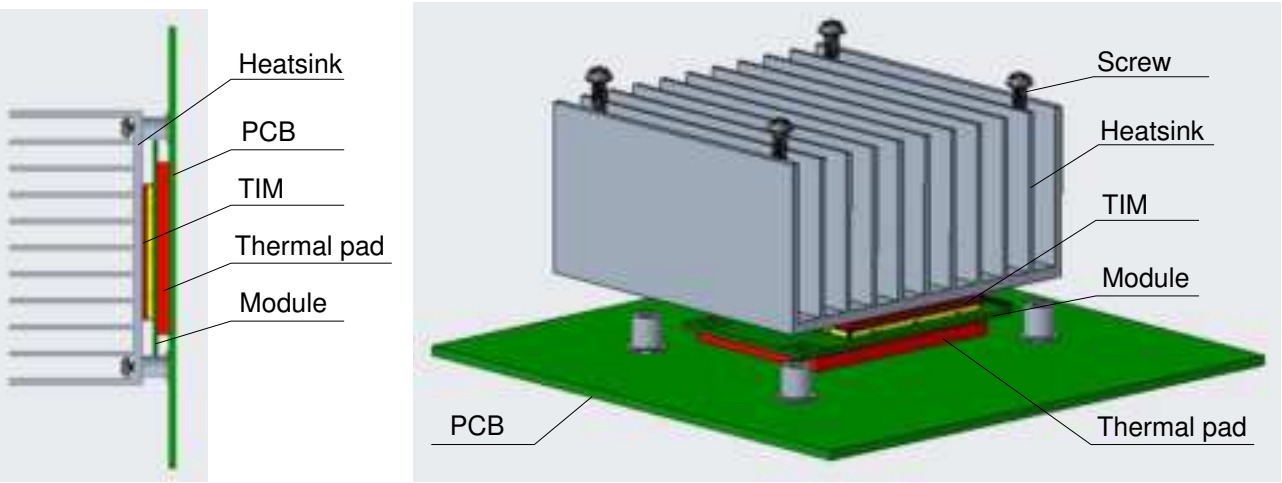

Figure 34: Placement and Fixing of the Heatsink

6.6. Absolute Maximum Ratings

Absolute maximum ratings for power supply and voltage on digital and analog pins of the module are listed in the following table.

Table 43: Absolute Maximum Ratings

Parameter	Min.	Typ.	Max.	Unit
VCC	-0.3	-	4.7	V
Voltage at Digital Pins	-0.3	-	2.3	V

6.7. Operating and Storage Temperatures

Table 44: Operating and Storage Temperatures

Parameter	Min.	Typ.	Max.	Unit
Operating Temperature Range [16]	-30	+25	+75	ºC
Extended Temperature Range [17]	-40	-	+85	ºC
Storage temperature Range	-40	-	+90	ºC

6.8. Notification

Please follow the principles below in module application.

6.8.1. Coating

If a conformal coating is necessary for the module, do NOT use any coating material that may chemically react with the PCB or shielding cover, and prevent the coating material from flowing into the module

6.8.2. Cleaning

Avoid using ultrasonic technology for module cleaning since it can damage crystals inside the module.

[16] To meet this operating temperature range, you need to ensure effective thermal dissipation, for example, by adding passive or active heatsinks, heat pipes, vapor chambers, etc. Within this range, the module meets 3GPP specifications.

[17] To meet this extended temperature range, you need to ensure effective thermal dissipation, for example, by adding passive or active heatsinks, heat pipes, vapor chambers, etc. Within this range, the module remains the ability to establish and maintain functions such as voice*, SMS, emergency call*, etc., without any unrecoverable malfunction. Radio spectrum and radio network are not influenced, while one or more specifications, such as P_{out}, may undergo a reduction in value, exceeding the specified tolerances of 3GPP. When the temperature returns to the normal operating temperature level, the module will meet 3GPP specifications again.

7 Mechanical Dimensions and Packaging

This chapter mainly describes mechanical dimensions and packaging specifications of RM520N-GL. All dimensions are measured in mm, and the dimensional tolerances are ±0.15 mm unless otherwise specified.

7.1. Mechanical Dimensions

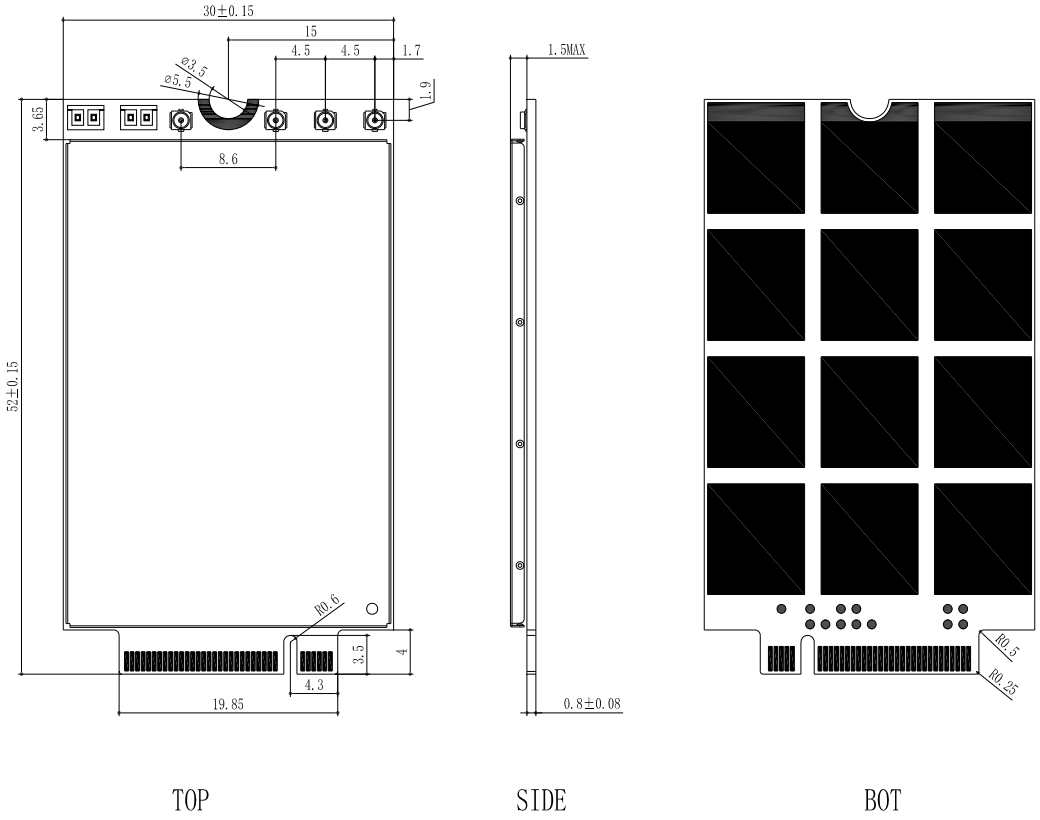

Figure 35: Mechanical Dimensions of the Module (Unit: mm)

7.2. Top and Bottom Views

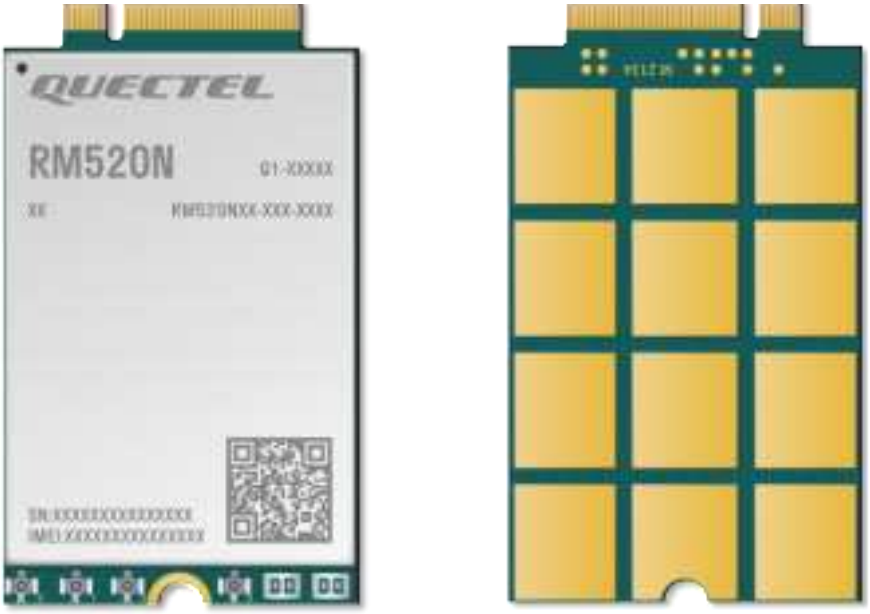

Top View

Bottom View

Figure 36: RM520N-GL Top and Bottom Views

NOTE

Images above are for illustration purpose only and may differ from the actual module. For authentic appearance and label, please refer to the module received from Quectel.

7.3. M.2 Connector

The module adopts a standard PCI Express M.2 connector which compiles with the directives and standards listed in the PCI Express M.2 specification.

7.4. Packaging

This chapter describes only the key parameters and process of packaging. All figures below are for reference only. The appearance and structure of the packaging materials are subject to the actual delivery

The module adopts blister tray packaging and details are as follow:

7.4.1. Blister Tray

Dimension details are as follow:

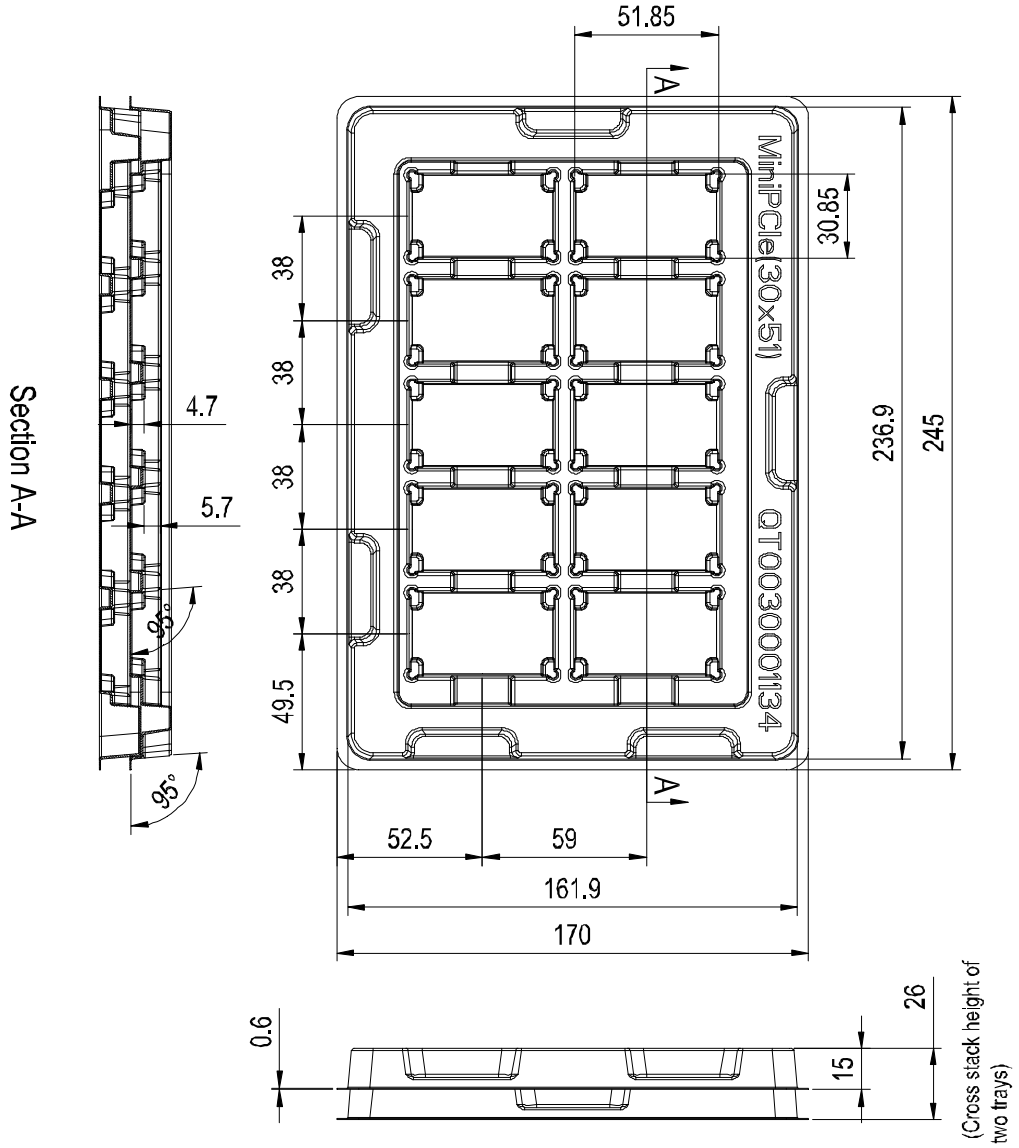

Figure 37: Blister Tray Dimension Drawing

7.4.2. Packaging Process

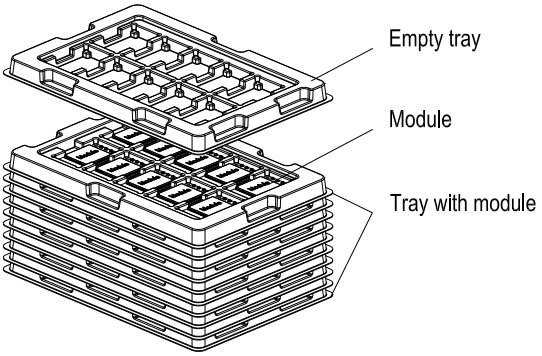

Pack 10 modules in each blister tray. Stack 10 blister trays with modules together, and put 1 empty blister tray on the top.

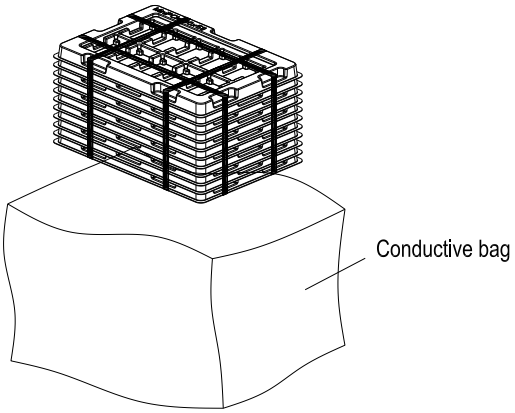

Pack 11 blister trays together and then put these blister trays into a conductive bag, seal and pack the conductive bag.

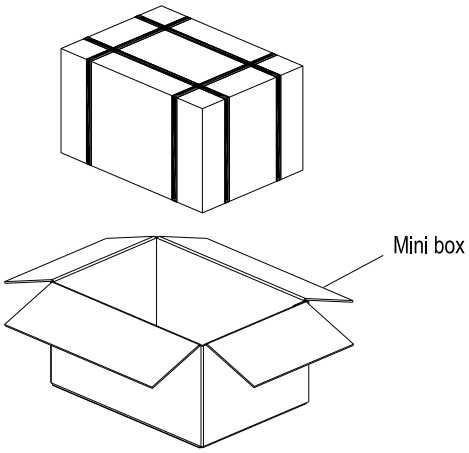

Put seal-packed blister trays into a mini box. One mini box contains 100 modules.

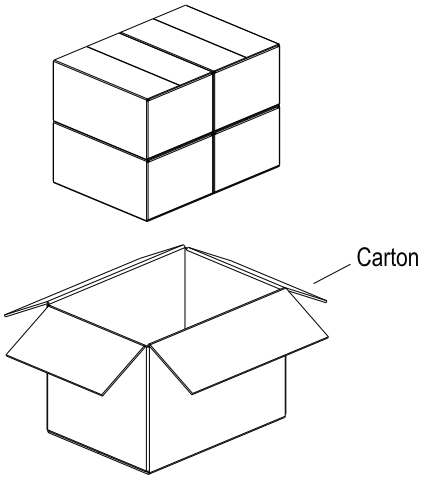

Put 4 mini boxes into 1 carton and then seal it. One carton can pack 400 modules.

Figure 38: Packaging Process

8 Appendix A References

Table 45: Related Documents

Document Name
[1] Quectel_RM520N-GL_Reference_Design
[2] Quectel_RM520N-GL_CA&EN-DC_Features
[3] Quectel_5G-M2_EVB_User_Guide
[4] Quectel_RG520N&RG525F&RG5x0F&RM5x0N_Series_AT_Commands_Manual
[5] Quectel_RG520N&RG525F&RG5x0F&RM5x0N_Series_GNSS_Application_Note

Table 46: Terms and Abbreviations

Abbreviation	Description
APT	Average Power Tracking
BIOS	Basic Input Output System
bps	Bit Per Second
BW	Bandwidth
CHAP	Challenge-Handshake Authentication Protocol
COEX	Coexistence
CPE	Customer Premise Equipment
CSQ	Cellular Signal Quality
DC-DC	Direct Current to Direct Current
DFOTA	Delta Firmware Upgrade Over-The-Air
DC-HSDPA	Dual-carrier High Speed Downlink Packet Access

DL	Downlink
DPR	Dynamic Power Reduction
DRX	Discontinuous Reception (***Chapter 3.1.1***) Diversity Reception (***Chapter 5***)
EN-DC	E-UTRA New Radio Dual Connectivity
EP	End Point
ESD	Electrostatic Discharge
ET	Envelope Tracking
E-UTRA	Evolved Universal Terrestrial Radio Access
FDD	Frequency Division Duplexing
FOTA	Firmware Over-The-Air
GLONASS	Global Navigation Satellite System (Russia)
GNSS	Global Navigation Satellite System
GPS	Global Positioning System
GSM	Global System for Mobile Communications
HB	High Band
HPUE	High Power User Equipment
HSDPA	High Speed Downlink Packet Access
HSPA	High Speed Packet Access
HSUPA	High Speed Uplink Packet Access
IC	Integrated Circuit
IPQ	Qualcomm Internet Processor
kbps	Kilo Bits Per Second
LAA	License Assisted Access
LED	Light Emitting Diode
LTE	Long Term Evolution
MB	Middle Band

Mbps	Mega Bits Per Second
ME	Mobile Equipment
MIMO	Multiple-Input Multiple-Output
MLCC	Multilayer Ceramic Chip Capacitor
MO	Mobile Originated
MSB	Most Significant Bit
MT	Mobile Terminated
NR	New Radio
PAP	Password Authentication Protocol
PCB	Printed Circuit Board
PCIe	Peripheral Component Interconnect Express
PDU	Protocol Data Unit
PPP	Point-to-Point Protocol
PRX	Primary Receive
QAM	Quadrature Amplitude Modulation
QPSK	Quadrature Phase Shift Keying
QZSS	Quasi-Zenith Satellite System
RC	Root Complex
RF	Radio Frequency
RHCP	Right Hand Circularly Polarized
RFFE	RF Front-End
Rx	Receive
SAR	Specific Absorption Rate
SCS	Sub-Carrier Spacing
SIMO	Single Input Multiple Output
SMS	Short Message Service
TBD	To Be Determined

TCP	Transmission Control Protocol
TDD	Time Division Duplexing
TTFF	Time to First Fix
Tx	Transmit
UART	Universal Asynchronous Receiver & Transmitter
UDP	User Datagram Protocol
UHB	Ultra High Band
UL	Uplink
URC	Unsolicited Result Code
USB	Universal Serial Bus
(U)SIM	(Universal) Subscriber Identity Module
V_{IH}	Input High Voltage Level
V_{IL}	Input Low Voltage Level
V_{OH}	Output High Voltage Level
V_{OL}	Output Low Voltage Level
VSWR	Voltage Standing Wave Ratio
WCDMA	Wideband Code Division Multiple Access
WLAN	Wireless Local Area Network
WWAN	Wireless Wide Area Network

9 Appendix B Operating Frequency

Table 47: Operating Frequencies (5G)

5G	Duplex Mode	Uplink Operating Band	Downlink Operating Band	Unit
n1	FDD	1920–1980	2110–2170	MHz
n2	FDD	1850–1910	1930–1990	MHz
n3	FDD	1710–1785	1805–1880	MHz
n5	FDD	824–849	869–894	MHz
n7	FDD	2500–2570	2620–2690	MHz
n8	FDD	880–915	925–960	MHz
n12	FDD	699–716	729–746	MHz
n13	FDD	777–787	746–756	MHz
n14	FDD	788–798	758–768	MHz
n18	FDD	815–830	860–875	MHz
n20	FDD	832–862	791–821	MHz
n24	FDD	1626.5–1660.5	1525–1559	MHz
n25	FDD	1850–1915	1930–1995	MHz
n26	FDD	814–849	859–894	MHz
n28	FDD	703–748	758–803	MHz
n29	SDL	-	717–728	MHz
n30	FDD	2305–2315	2350–2360	MHz
n34	TDD	2010–2025	2010–2025	MHz
n38	TDD	2570–2620	2570–2620	MHz
n39	TDD	1880–1920	1880–1920	MHz
n40	TDD	2300–2400	2300–2400	MHz

5G	Duplex Mode	Uplink Operating Band	Downlink Operating Band	Unit
n41	TDD	2496–2690	2496–2690	MHz
n46	TDD	5150–5925	5150–5925	MHz
n47	TDD	5855–5925	5855–5925	MHz
n48	TDD	3550–3700	3550–3700	MHz
n50	TDD	1432–1517	1432–1517	MHz
n51	TDD	1427–1432	1427–1432	MHz
n53	TDD	2483.5–2495	2483.5–2495	MHz
n65	FDD	1920–2010	2110–2200	MHz
n66	FDD	1710–1780	2110–2200	MHz
n67	SDL	-	738–758	MHz
n70	FDD	1695–1710	1995–2020	MHz
n71	FDD	663–698	617–652	MHz
n74	FDD	1427–1470	1475–1518	MHz
n75	SDL	-	1432–1517	MHz
n76	SDL	-	1427–1432	MHz
n77	TDD	3300–4200	3300–4200	MHz
n78	TDD	3300–3800	3300–3800	MHz
n79	TDD	4400–5000	4400–5000	MHz
n80	SUL	1710–1785	-	MHz
n81	SUL	880–915	-	MHz
n82	SUL	832–862	-	MHz
n83	SUL	703–748	-	MHz
n84	SUL	1920–1980	-	MHz
n85	FDD	698–716	728–746	MHz
n86	SUL	1710–1780	-	MHz
n89	SUL	824–849	-	MHz
n90	TDD	2496–2690	2496–2690	MHz

5G	Duplex Mode	Uplink Operating Band	Downlink Operating Band	Unit
n91	FDD	832–862	1427–1432	MHz
n92	FDD	832–862	1432–1517	MHz
n93	FDD	880–915	1427–1432	MHz
n94	FDD	880–915	1432–1517	MHz
n95	SUL	2010–2025	-	MHz
n96	TDD	5925–7125	5925–7125	MHz
n97	SUL	2300–2400	-	MHz
n98	SUL	1880–1920	-	MHz
n99	SUL	1626.5–1660.5	-	MHz

Table 48: Operating Frequencies (2G + 3G + 4G)

2G	3G	4G	Duplex Mode	Uplink	Downlink	Unit
-	B1	B1	FDD	1920–1980	2110–2170	MHz
PCS1900	B2/BC1	B2	FDD	1850–1910	1930–1990	MHz
DCS1800	B3	B3	FDD	1710–1785	1805–1880	MHz
-	B4	B4	FDD	1710–1755	2110–2155	MHz
GSM850	B5/BC0	B5	FDD	824–849	869–894	MHz
-	B6	-	FDD	830–840	875–885	MHz
-	B7	B7	FDD	2500–2570	2620–2690	MHz
EGSM900	B8	B8	FDD	880–915	925–960	MHz
-	B9	B9	FDD	1749.9–1784.9	1844.9–1879.9	MHz
-	B10	B10	FDD	1710–1770	2110–2170	MHz
-	B11	B11	FDD	1427.9–1447.9	1475.9–1495.9	MHz
-	B12	B12	FDD	699–716	729–746	MHz
-	B13	B13	FDD	777–787	746–756	MHz
-	B14	B14	FDD	788–798	758–768	MHz
-	-	B17	FDD	704–716	734–746	MHz

2G	3G	4G	Duplex Mode	Uplink	Downlink	Unit
-	-	B18	FDD	815–830	860–875	MHz
-	B19	B19	FDD	830–845	875–890	MHz
-	B20	B20	FDD	832–862	791–821	MHz
-	B21	B21	FDD	1447.9–1462.9	1495.9–1510.9	MHz
-	B22	B22	FDD	3410–3490	3510–3590	MHz
-	-	B24	FDD	1626.5–1660.5	1525–1559	MHz
-	B25	B25	FDD	1850–1915	1930–1995	MHz
-	B26	B26	FDD	814–849	859–894	MHz
-	-	B27	FDD	807–824	852–869	MHz
-	-	B28	FDD	703–748	758–803	MHz
-	-	B29	FDD [18]	-	717–728	MHz
-	-	B30	FDD	2305–2315	2350–2360	MHz
-	-	B31	FDD	452.5–457.5	462.5–467.5	MHz
-	-	B32	FDD [18]	-	1452–1496	MHz
-	B33	B33	TDD	1900–1920	1900–1920	MHz
-	B34	B34	TDD	2010–2025	2010–2025	MHz
-	B35	B35	TDD	1850–1910	1850–1910	MHz
-	B36	B36	TDD	1930–1990	1930–1990	MHz
	B37	B37	TDD	1910–1930	1910–1930	MHz
-	B38	B38	TDD	2570–2620	2570–2620	MHz
-	B39	B39	TDD	1880–1920	1880–1920	MHz
-	B40	B40	TDD	2300–2400	2300–2400	MHz
-	-	B41	TDD	2496–2690	2496–2690	MHz
-	-	B42	TDD	3400–3600	3400–3600	MHz
-	-	B43	TDD	3600–3800	3600–3800	MHz

[18] Restricted to E-UTRA operation when carrier aggregation is configured. The downlink operating band is paired with the uplink operating band (external) of the carrier aggregation configuration that is supporting the configured Pcell.

2G	3G	4G	Duplex Mode	Uplink	Downlink	Unit
-	-	B44	TDD	703–803	703–803	MHz
-	-	B45	TDD	1447–1467	1447–1467	MHz
-	-	B46	TDD	5150–5925	5150–5925	MHz
-	-	B47	TDD	5855–5925	5855–5925	MHz
-	-	B48	TDD	3550–3700	3550–3700	MHz
-	-	B50	TDD	1432–1517	1432–1517	MHz
-	-	B51	TDD	1427–1432	1427–1432	MHz
-	-	B52	TDD	3300–3400	3300–3400	MHz
-	-	B65	FDD	1920–2010	2110–2200	MHz
-	-	B66	FDD	1710–1780	2110–2200 [19]	MHz
-	-	B67	FDD [18]	-	738–758	MHz
-	-	B68	FDD	698–728	753–783	MHz
-	-	B69	FDD [18]	-	2570–2620	MHz
-	-	B70	FDD [20]	1695–1710	1995–2020	MHz
-	-	B71	FDD	663–698	617–652	MHz
-	-	B72	FDD	451–456	461–466	MHz
-	-	B73	FDD	450–455	460–465	MHz
-	-	B74	FDD	1427–1470	1475–1518	MHz
-	-	B75	FDD [18]	-	1432–1517	MHz
-	-	B76	FDD [18]	-	1427–1432	MHz
-	-	B85	FDD	698–716	728–746	MHz
-	-	B87	FDD	410–415	420–425	MHz
-	-	B88	FDD	412–417	422–427	MHz

[19] The range 2180–2200 MHz of the DL operating band is restricted to E-UTRA operation when carrier aggregation is configured.
[20] The range 2010–2020 MHz of the DL operating band is restricted to E-UTRA operation when carrier aggregation is configured and TX-RX separation is 300 MHz. The range 2005–2020 MHz of the DL operating band is restricted to E-UTRA operation when carrier aggregation is configured and TX-RX separation is 295 MHz.